EPSON

Robot System

Safety Manual

Read this manual first

Rev.7 ENM238B6096F

Original instructions

This manual contains precautions for the correct use of the robot system.

Please carefully read this manual before installing the robot system.

Keep this manual handy for easy access at all times and reread it when you find anything unclear.

Robot System　Safety Manual　Read this manual first　Rev.7

Robot System

Safety Manual

Rev.7

©Seiko Epson Corporation 2021-2023

FOREWORD

Thank you for purchasing our robot products.

This manual contains precautions for the correct use of the robot system.

Please carefully read this manual and other related manuals before installing the robot system.

Keep this manual handy for easy access at all times and reread it when you find anything
unclear.

The robot system and its optional parts are shipped to our customers only after being subjected to the strictest quality controls, tests, and inspections to certify its compliance with
our high performance standards. Please note that the basic performance of the product will not be exhibited if our robot system is used outside of the usage conditions and product specifications described in the manuals.

This manual describes possible dangers and consequences that we can foresee. Be sure to comply with safety precautions on this manual to use our robot system safety and correctly.

EU Directive Compliance Precautions (Official Language)

In the EU official languages, the manual for this product is only available in English.

Précautions de conformité à la directive UE (langue officielle)

Dans les langues officielles de l'UE, le manuel de ce produit n'est disponible qu'en anglais.

Precauzioni relative alla conformità alla direttiva UE (lingua ufficiale)

Nelle lingue ufficiali dell'UE, il manuale di questo prodotto è disponibile solo in inglese.

Maßnahmen zur Einhaltung der Anforderungen der EU-Richtlinie (Offizielle Sprache)

In den offiziellen Sprachen der EU ist das Benutzerhandbuch für dieses Produkt nur in Englisch verfügbar.

Precauciones de cumplimiento de las directivas UE (idioma oficial)

En los idiomas oficiales de la UE, el manual de este producto solo está disponible en inglés.

Precauções de Conformidade com a Diretiva da UE (Idioma Oficial)

Nos idiomas oficiais da UE, o manual deste produto está disponível apenas em inglês.

Opmerkingen over overeenstemming met de EU-richtlijn (officiële taal)

In de officiële EU-talen is de handleiding voor dit product alleen beschikbaar in het Engels.

TRADEMARKS

Microsoft, Windows, and Windows logo are either registered trademarks or trademarks of Microsoft Corporation in the United States and/or other countries. Other brand and product names are trademarks or registered trademarks of the respective holders.

NOTICE

No part of this manual may be copied or reproduced without authorization.
The contents of this manual are subject to change without notice.
Please notify us if you should find any errors in this manual or if you have any comments regarding its contents.

MANUFACTURER

SEIKO EPSON CORPORATION

3-3-5 Owa, Suwa-shi, Nagano, 392-8502

URL : global.epson.com/company/
: www.epson.jp/prod/robots/

Toyoshina Plant
Manufacturing Solutions Operations Division
6925 Toyoshina Tazawa,
Azumino-shi, Nagano, 399-8285
Japan
TEL : +81-(0)263-72-1530
FAX : +81-(0)263-72-1685

IMPORTERS

Importer for the EU

EPSON EUROPE B.V.

Azie building, Atlas ArenA, Hoogoorddreef 5, 1101 BA

Amsterdam Zuidoost The Netherlands

TEL : +31-20-314-5000

FAX : +31-20-314-5010

Importer for the UK

EPSON (U.K.) LIMITED

Westside, London Road, Hemel Hempstead, Hertfordshire, HP3 9TD, U. K

TEL : +44-1442-261144

FAX : +44-1442-227227

CONTACT INFORMATION

SUPPLIERS (Country/Region)

North & South America

Epson America, Inc.

Factory Automation/Robotics

3131 Katella Ave., Los Alamitos, CA 90720,

U.S.A

TEL : +1-562-981-3840

FAX : +1-562-981-5220

E-MAIL : info@robots.epson.com

Europe

Epson Deutschland GmbH

Manufacturing Solutions
Schiessstrasse 49, 40549 Dusseldorf
Germany
TEL : +49-(0)-211-54229-009
FAX : +49-(0)-211-54229-001
E-MAIL : service.ms@epson.eu
URL : www.epson.de/robots

Chinese mainland

Epson (China) Co., Ltd.

Robotics Division
4F, Tower 1, China Central Place,
81 Jianguo Road, Chaoyang District,
Beijing, 100025, PRC
TEL : +86-(0)-10-8522-1199
FAX : +86-(0)-10-8522-1125

Taiwan region

Epson Taiwan Technology & Trading Ltd.

Manufacturing Solutions Business Unit
15F, No.100, Song Ren Road, Sinyi Dist. Taipei City 11073, Taiwan, R.O.C.

TEL : +886-(0)-2-8786-6688
FAX : +886-(0)-2-8786-6600
E-MAIL : info.ms@exc.epson.com.tw
URL : https://www.epson.com.tw/robot-tech#
INQUIRY : https://www.epson.com.tw/contactrobot
WEB PAGE

Korea

Epson Korea Co., Ltd.

MS Business Team
10F Posco Tower Yeoksam, Teheranro 134(Yeoksam-dong)
Gangnam-gu, Seoul, 06235
Korea

TEL : +82-(0)-2-3420-6632
FAX : +82-(0)-2-558-4271
E-MAIL : info.ms@epson.co.kr
URL : www.epson.co.kr

Southeast Asia

Epson Singapore Pte. Ltd.

Factory Automation System
438B Alexandra Road,
Block B Alexandra TechnoPark, #04-01/04,
Singapore 119968

TEL : +65-(0)-6586-5500
FAX : +65-(0)-6271-7066

India

Epson India Pvt. Ltd.

Sales & Marketing (Factory Automation)
12th Floor, The Millenia, Tower A, No. 1,
Murphy Road, Ulsoor, Bangalore,
India 560008

TEL : +91-80-4566-5000

FAX : +91-80-4566-5005

Japan

Epson Sales Japan Corporation

JR Shinjuku Miraina Tower, 4-1-6
Shinjuku, Shinjuku-ku, Tokyo 160-8801
Japan

Implementation and Business negotiation support

TEL : +81-(0)3-5919-5257

E-MAIL : epson-robot@exc.ehb.epson.co.jp

Engineering and Repair support

TEL : +81-(0)42-847-3035

E-MAIL : Robot.Tech@exc.ehb.epson.co.jp

URL : www.epson.jp/products/robots/

DISPOSAL

When disposing this product, dispose in accordance with the laws and regulations of each country.

Regarding battery disposal

The battery removal/replacement procedure is described in the following manuals:

Maintenance Manual

For European Union customers only

The crossed out wheeled bin label that can be found on your product indicates that this product and incorporated batteries should not be disposed of via the normal household waste stream. To prevent possible harm to the environment or human health please separate this product and its batteries from other waste streams to ensure that it can be recycled in an environmentally sound manner. For more details on available collection facilities please contact your local government office or the retailer where you purchased this product. Use of the chemical symbols Pb, Cd or Hg indicates if these metals are used in the battery.

NOTE

This information only applies to customers in the European Union, according to Directive 2006/66/EC OF THE EUROPEAN PARLIAMENT AND OF THE COUNCIL OF 6 September 2006 on batteries and accumulators and waste batteries and accumulators and repealing Directive 91/157/EEC and legislation transposing and implementing it into the various national legal systems, and to customers in countries in Europe, Middle East and Africa (EMEA) where they have implemented equivalent regulations.

For other countries, please contact your local government to investigate the possibility of recycling your product.

For Users in Taiwan region

Please separate used batteries from other waste streams to ensure that it can be recycled in an environmentally sound manner. For more details on available collection facilities please contact your local government office or the retailer where you purchased this product.

For California customers only

The lithium batteries in this product contain
Perchlorate Material - special handling may apply,
See: https://dtsc.ca.gov/perchlorate/

Table of Contents

Safety of This Product 1
Usage and Purpose of This Product 1
Installation Environment 1
Residual Risk 2
Declaration of Conformity 2
Safety Requirements 2
Notes on CE marking 4
Notes on UKCA marking 4
Safety Precautions 5
Conventions 5
Precautions for Unpacking, Transportation, and Relocation 5
Precautions for Design and Installation 6
Precautions for Operation 13
Precautions for Maintenance 17
Warning labels 20
Controller 20
Manipulator 25
For GX series 52
Safety Features 57
Emergency Stop Switch 57
Safety Door Input 57
Protection Features 58
Low Power Mode 58
Dynamic Brake 58
Motor Overload Detection 58
Irregular Motor Torque (out-of-control Manipulator) Detection 58
Motor Speed Error Detection 58
Positioning Overflow - Servo Error - Detection 58
Speed Overflow - Servo Error - Detection 59
CPU Irregularity Detection 59
Memory Check-sum Error Detection 59
Overheat Detection at the Motor Driver Module 59
Relay Deposition Detection 59
Over-Voltage Detection 59
Power Supply Voltage Drop Detection 59
Temperature Anomaly Detection 59
Fan Malfunction Detection 59
Training 60
Training Held by Persons in Charge of Safety Management 60

Knowledge and Training You Need for Operating the Robot System 61
The Manuals of This Product 62
Manual Types 62
How to Read the Manuals 64
Installing the Software and Manuals 64
Outline from Unpacking to Operation of Robot System 65
China RoHS 66

Safety of This Product

Usage and Purpose of This Product

The usage and purpose of this product is transporting and assembling parts in an isolated safety area.

Installation Environment

For using the robot system function properly and safely, a suitable environment is required. Install the robot system in a location meets the following conditions.

<table>
<tr><th>Item</th><th colspan="3">Condition</th></tr>
<tr><td rowspan="4">Ambient temperature</td><td>Installation</td><td colspan="2">5 to 40°C</td></tr>
<tr><td rowspan="3">Transportation or Storage</td><td>–20 to 60°C</td><td>VT, T, T-B, LS-B, G, C, GX,
RC700-D, RC700-A, RC700, RC90-B</td></tr>
<tr><td>–25 to 55°C</td><td>RS</td></tr>
<tr><td>0 to 45°C</td><td>N</td></tr>
<tr><td rowspan="4">Ambient relative humidity
(no condensation)</td><td rowspan="2">Installation</td><td>10 to 80%</td><td>VT, LS-B, G, RS, C8, C12, GX</td></tr>
<tr><td>20 to 80%</td><td>T, T-B, N, C4,
RC700-D, RC700-A, RC700, RC90-B</td></tr>
<tr><td rowspan="2">Transportation or Storage</td><td>10 to 90%</td><td>VT, T, T-B, LS-B, G, RS, C, GX,
RC700-D, RC700-A, RC700, RC90-B</td></tr>
<tr><td>10 to 80%</td><td>N</td></tr>
<tr><td>Fast transient burst noise</td><td colspan="3">1 kV or less (signal wire)</td></tr>
<tr><td>Electrostatic noise</td><td colspan="3">4 kV or less</td></tr>
<tr><td rowspan="2">Elevation</td><td>1000 m or less</td><td colspan="2">VT, T, T-B, LS-B, G, RS, C, N
RC700-A, RC700, RC90-B</td></tr>
<tr><td>2000 m or less</td><td colspan="2">GX
RC700-D</td></tr>
<tr><td>Environment</td><td colspan="3">- Install indoors
- Keep away from direct sunlight
- Keep away from dust, oily smoke, salinity, metal powder or other contaminants
- Keep away from flammable or corrosive solvents and gases
- Keep away from water
- Keep away from shock or vibration
- Keep away from sources of electric noise
- Keep away from explosive area
- Keep away from a large quantity of radiation</td></tr>
</table>

Residual Risk

For the residual risk of our Manipulator or controller, check the warnings or cautions in each item of each chapter.

Declaration of Conformity

For the directives and standards of each country which this product complies with, check the attached Declaration of Conformity.

Safety Requirements

Specific tolerances and operating conditions for safety are contained in the manuals for the Manipulator, Controller and other devices. Be sure to read those manuals as well.

For the installation and operation of the robot system, be sure to comply with the applicable local and national regulations. Robot systems safety standards and other examples are given in this chapter. Therefore, to ensure that safety measures are complete, please refer to the other standards listed as well.

(Note: The following is only a partial list of the necessary safety standards.)

ISO 10218-1	Robots and robotic devices -- Safety requirements for industrial robots -- Part 1: Robots
ISO 10218-2	Robots and robotic devices -- Safety requirements for industrial robots -- Part 2: Robot systems and integration
ANSI/RIA R15.06	American National Standard for Industrial Robots and Robot Systems -- Safety Requirements
ISO 12100	Safety of machinery -- General principles for design -- Risk assessment and risk reduction
ISO 13849-1	Safety of machinery -- Safety-related parts of control systems -- Part 1: General principles for design
ISO 13850	Safety of machinery -- Emergency stop function-- Principles for design
ISO 13855	Safety of machinery -- Positioning of safeguards with respect to the approach speeds of parts of the human body.
ISO 13857	Safety of machinery -- Safety distances to prevent hazard zones being reached by upper and lower limbs.

ISO14120	Safety of machinery -- Guards -- General requirements for the design and construction of fixed and movable guards
IEC 60204-1	Safety of machinery -- Electrical equipment of machines -- Part 1: General requirements
CISPR11	Industrial, scientific and medical (ISM) radio-frequency equipment -- Electromagnetic disturbance characteristics -- Limits and methods of measurement
IEC 61000-6-2	Electromagnetic compatibility (EMC) -- Part 6-2: Generic standards -- Immunity for industrial environments

Notes on CE marking

Epson robot system (Manipulators and Controllers) is a device that will be incorporated into the end user manufacturing equipment, so it is a “partly completed machinery” which defined in subparagraph 1 (g) of Article 1 (Scope) of the European Machinery Directive (2006/42/EC).

Pursuant to the Article 13 (Procedure for partly completed machinery) of the European Machinery Directive, Epson has declared that the Epson robot system conforms to the European Machinery Directive, the European EMC Directive (2014/30/EU), and the European RoHS Directive (2011/65/EU) in the “Declaration of Incorporation of Partly Completed Machinery.” (Please refer to the Declaration of Incorporation of Partly Completed Machinery included with the robot system for details.) Therefore, the Epson Manipulators do not bear the CE marking because the Epson robot system is a “partly completed machinery.”

However, the Robot Controller is considered as a “completed product.” Epson has separately declared that Controller conforms to the European EMC Directive and the European RoHS Directive, and bears the CE marking as proof of conformity.

Notes on UKCA marking

Epson robot system (Manipulators and Controllers) is a device that will be incorporated into the end user manufacturing equipment, so it is a “partly completed machinery” which defined in subparagraph (1) of regulation 6 of the Supply of Machinery (Safety) Regulations 2008.

Pursuant to the regulation 8 of Supply of Machinery (Safety) Regulations 2008, Epson has declared that the Epson robot system conforms to the Supply of Machinery (Safety) Regulations 2008, the Electromagnetic Compatibility Regulations 2016, and the Restriction of the Use of Certain Hazardous Substances in Electrical and Electronic Equipment Regulations 2012 in the "Declaration of Incorporation of Partly Completed Machinery." (Please refer to the Declaration of Incorporation of Partly Completed Machinery included with the robot system for details.) Therefore, the Epson Manipulators do not bear the UKCA marking because the Epson robot system is a “partly completed machinery.”

However, the Robot Controller is considered as a “completed product.” Epson has separately declared that Controller conforms to the Electromagnetic Compatibility Regulations 2016 and the Restriction of the Use of Certain Hazardous Substances in Electrical and Electronic Equipment Regulations 2012, and bears the UKCA marking as proof of conformity.

Safety Precautions

This chapter describes precautions for using the robot system safely. Before using the robot system, be sure to read the descriptions.

In the descriptions of this chapter, the word “Controller” indicates Drive Unit as well.

Using the robot system without understanding the safety requirements is extremely hazardous, and may result in serious bodily injury and/or severe equipment damage to the robot system.

Conventions

Important safety considerations are indicated throughout the manual by the following symbols. Be sure to read the descriptions shown with each symbol.

WARNING	This symbol indicates that a danger of possible serious injury or death exists if the associated instructions are not followed properly.
WARNING	This symbol indicates that a danger of possible harm to people caused by electric shock exists if the associated instructions are not followed properly.
CAUTION	This symbol indicates that a danger of possible harm to people or physical damage to equipment and facilities exists if the associated instructions are not followed properly.

Precautions for Unpacking, Transportation, and Relocation

Unpacking, transportation, and relocation of Manipulator and robotic equipment shall be performed by personnel who has taken robot system training held by us and suppliers and should conform to all national and local codes. Follow the safety precautions below.

WARNING	■ When transporting the Manipulator, please transport it with a dolly etc. as it was delivered. Do not carry with the end effector or peripherals attached. Loss of balance can cause the Manipulator to fall, it is extremely hazardous and may result in serious bodily injury and/or severe equipment damage to the robot system. ■ Only qualified personnel should perform sling work and operate a crane or forklift. When these operations are performed by unqualified personnel, it is extremely hazardous and may result in serious bodily injury and/or severe equipment damage to the robot system.

WARNING	■ Stabilize the Manipulator with your hands when hoisting it. Unstable hoisting is extremely hazardous and may results in serious bodily injury and/or severe equipment damage to the robot system as the fall of the Manipulator. ■ People involved in the work should wear personal protective equipment such as a helmet when transporting. Also, make sure there are no other people around.

CAUTION	■ Avoid excessive vibration or shock during Manipulator transporting. Excessive vibration or shock may cause equipment damage to and/or malfunction of the Manipulator. ■ When removing the anchor bolts, support the Manipulator to prevent falling. Removing the anchor bolts without supporting the Manipulator may get hands or feet caught as the Manipulator will fall. ■ Do not remove the wire tie securing the arm until you finish the installation. You may get your hands caught in the Manipulator when the wire tie is removed before completing the installation. ■ To transport the Manipulator, secure it to the delivery equipment, or transport it while following the method and number of people described in Manipulator manual. If there is an area where holding is restricted, do not hold that area.

Precautions for Design and Installation

The robot system should be designed and installed by personnel who has taken robot system training held by us and suppliers. Also, follow the safety precautions below.

WARNING	■ Personnel who design and/or construct the robot system with this product must read this manual to understand the safety requirements before designing and/or constructing the robot system. Designing and/or constructing the robot system without understanding the safety requirements is extremely hazardous, and may result in serious bodily injury and/or severe equipment damage to the robot system. ■ The robot system must be used within the environmental conditions described in their respective manuals. This product has been designed and manufactured strictly for use in a normal indoor environment. Using the product in an environment that exceeds the specified environmental conditions may not only shorten the life cycle of the product but may also cause serious safety problems. ■ The robot system must be used within the installation requirements described in the manuals. Using the robot system outside of the installation requirements may not only shorten the life cycle of the product but also cause serious safety problems.

WARNING

- When designing or installing a robot system, wear at least the following protective gear. Working without protective gear may cause serious safety problems.
  - Work clothes suitable for work
  - Helmet
  - Safety shoes
- This product is intended for transporting and assembling parts in an isolated safety area. Be sure to install a safeguard by referring the standards described in "*Safety Requirements*" in this manual to ensure safety. Failure to install a safeguard may be extremely hazardous and may result in serious bodily injury and/or severe equipment damage to the robot system.
- The interlock of the Safety Door must be functioning when the robot system is operated. Do not operate the system under the condition that the switch cannot be turned ON/OFF. (I.E. the condition where the switch is disabled) (Example: Tape is put around the switch to hold it closed.) Operating the robot system when the switch is not functioning properly is extremely hazardous and may cause serious safety problems as the Safety Door input cannot fulfill its intended function.
- Be sure to install an emergency stop device that allows the operator to stop the system immediately. Failure to install an emergency stop device may be extremely hazardous may result in serious bodily injury and/or severe equipment damage to the robot system.
- When connecting an emergency stop or a safety input signal such as a Safety Door to the EMERGENCY connector, make sure that the emergency stop of the teach pendant connected to the TP port works.
- Install the Manipulator at a location with enough space so that a tool or a work piece on the end effector does not reach a wall or a safeguard when the Manipulator extends its arm while holding a work piece. Installing the Manipulator at a location with insufficient space is extremely hazardous and may result in serious bodily injury and/or severe equipment damage to the robot system as a tool or a work piece may collide with a wall and a safeguard.

  Set the distance between the safeguard and the tool or workpiece according to ISO10218-2. For the stopping time and stopping distance, refer to the manipulator manual "Appendix B: Stopping time and Stopping distance in Emergency" and "Appendix C: Stopping time and Stopping distance When Safeguard Is Opened".
- Anchor the Manipulator before turning ON the power to or operating the Manipulator. Turning ON the power to or operating the Manipulator that is not anchored is extremely hazardous and may result in serious bodily injury and/or severe equipment damage to the robot system as the Manipulator may fall.

WARNING

- Keep away from the Manipulator while the power is ON if you have not taken a training. Do not enter the operating area while the power is ON. Entering the operating area with the power ON is extremely hazardous and may cause serious safety problems as the Manipulator may move even though it seems to be stopped. In addition, establish a safe working procedure to prevent danger due to unexpected movement of the Manipulator or wrong operation by the operator, and work according to the procedure.
- Before operating the robot system, make sure that both the Emergency Stop switches and safeguard switches function properly. Operating the robot system when the switches do not function properly is extremely hazardous and may result in serious bodily injury and/or serious damage to the robot system as the switches cannot fulfill their intended functions in an emergency.
- Before installing and operating the Manipulator, make sure that all parts of the Manipulator are in place and have no external defects. Missing or defective parts may cause improper operation of the Manipulator. Improper operation of the Manipulator is extremely hazardous and may result in serious bodily injury and/or severe equipment damage to the robot system.
- Do not use Manipulator near the equipment developing strong electromagnetic forces. It may cause malfunction or failures with Manipulator.
- Do not use Manipulator where there is a risk of Electromagnetic Interference, Electro-Static Discharge, Radio-Frequency Interference. It may cause malfunction with Manipulator.
- Do not use Manipulator in a place exposed to flammable liquids such as flammable gases, flammable dust, gasoline, and solvents that may explode or catch fire. There is a risk of injury, serious accident including death, or fire.
- Do not close your hand or fingers to moving part of Manipulator. There is a risk of getting injured by pinching your hands.
- Do not install the robot controller upside down or at an angle.
- For protection model:
  Connect the power cable connecter and the signal cable connector to the connector plate immediately after the Manipulator installation. The Manipulator without connecting them cannot ensure IP65. Also, it may result in electric shock and/or malfunction of the robot system as it.

WARNING	■ Be sure to use a power plug or disconnecting device for the power cable. Do not connect it directly to the factory power supply. ■ Do not open the cover(s) of the Controller or the Manipulator except while maintaining it. Opening the cover(s) of the Controller is extremely hazardous and may result in electric shock even when its main power is OFF because of the inside high voltage charge unit. ■ Make sure that the power to the robot system is turned OFF before connecting or disconnecting any cables. Connecting or disconnecting any cables with the power ON is extremely hazardous and may result in electric shock and/or malfunction of the Controller. ■ Be sure to connect the cables with securely protected the high voltage unit to the Controller properly. Do not allow unnecessary strain on the cables. (Do not put heavy objects on the cables. Do not bend or pull the cables forcibly.) The unnecessary strain on the cables may result in damage to the cables, disconnection, and/or contact failure. Damaged cables, disconnection, or a contact failure is extremely hazardous and may result in electric shock and/or improper function of the system. ■ When connecting the plug to fit the outlet in your factory, make sure that it is done by qualified personnel. When connecting the plug, be sure to connect the earth wire of the AC power cable colored green/yellow on the Controller to the earth terminal of the factory power supply. The equipment must always be grounded properly to avoid the risk of electric shock. ■ Use an earth leakage breaker on the AC power cable of the Controller and T/VT series to avoid the electric shock and circuit breakdown. ■ The installation of options should be performed by personnel who has taken robot system training held by us and suppliers. Before installing, always make sure that the main power of the robot system is turned OFF and that the power plug is disconnected. Performing any installation procedure while the main power is ON or the high voltage charged area is not discharged completely is extremely hazardous and may result in electric shock and/or cause serious safety problems. ■ When opening the front side of the Controller, make sure to disconnect the power plug. Touching the power supply terminal block inside the Controller while the power supply is ON is extremely hazardous and may result in electric shock and/or cause serious safety problems. ■ Grounding the Manipulator is done by connecting with the Controller (for T/VT series, connected with power cable). Be sure to install the controller and connect the cables. If the ground wire is improperly connected to ground, it may result in the fire or electric shock.

WARNING

- Before wiring, turn OFF the Controller and related equipment, and then pull up a warning sign (e.g. DO NOT TURN ON THE POWER.). Wiring with the power ON is extremely hazardous and may result in electric shock and/or malfunction of the robot system.
- When with the brake release unit or the external short connector:
  When connecting / replacing the brake release unit or the external short connector, turn OFF the power to the Controller and the brake release unit. Inserting and removing the connector while the power is ON may result in electrical shock.
- Do not touch the terminals. It may cause electric shock, product damage, or malfunction.
- For DC specification Manipulator:

  When using DC specification Manipulator, do not connect to AC power source.
  Connecting to AC power source is extremely hazardous and may result in electric shock and/or malfunction of the robot system.
- For DC specification Manipulator:

  When using DC specification Manipulator and connecting to DC power source such as battery, be careful of polarity. If connecting Manipulator cable to wrong polarity, it may result in malfunction of the robot system. For details on connection, refer to each Manipulator manual.

CAUTION

- Necessity of organizational measures for cyber security

  The following organizational measures should be taken to address cybersecurity risks:
  - Perform risk analysis based on security threats and vulnerabilities related to your organization's assets.
  - Develop a security policy to address risks and educate and train appropriate personnel.
  - Create guidelines for how to respond when security issues arise and make them known throughout your organization.
- Epson robot systems are designed to be used within a closed local area network. Please refrain from connecting to networks with Internet access. If a connection to the Internet is required, we recommend taking the necessary technical measures* to protect against malicious attacks and vulnerabilities over the Internet.

  *: These measures include, but are not limited to, access controls, firewalls, data diodes, and so on.

CAUTION

- Do not connect any devices other than those listed in the manual to the external connection terminals of this product. Do not use the external connection terminals for any purpose other than those described in the manual. Failures such as unauthorized logins, information falsification, information leaks, and robot system stoppages may occur. Were commend taking physical measures to prevent anyone other than the administrator and those authorized by the administrator from touching the Controller and control devices. Furthermore, we recommend taking technical and physical measures to prevent access to the network to which the product is connected.
- The serial number of the Manipulator that should be connected is indicated on the Connection Check Label on the Controller. Connect the Controller and the Manipulator correctly. Improper connection between the Controller and the Manipulator may cause not only improper function of the robot system but also safety problems.
- When using remote I/O, always make sure of the followings. Using the robot system under unsatisfactory conditions may cause malfunction of the system and/or safety problems.
  - Assign remote functions to inputs/outputs correctly and wire correctly when setting up remote I/O signals.
  - Make sure that the functions correspond to the correct input/output signals before turning ON the system.
  - When verifying the robot system operation, prepare for failures with initial settings or wiring. If the Manipulator functions unusually by the failures with initial settings or wiring, press the Emergency Stop switch immediately to stop the Manipulator.

CAUTION

- The Manipulator must be installed to avoid interference with buildings, structures, utilities, other machines and equipment that may create a trapping hazard or pinch points.
- Oscillation (resonance) may occur during operation depending on rigidity of the installation table. If the oscillation occurs, improve rigidity of the table or change the speed or acceleration and deceleration settings.
- Only authorized or certified personnel should be allowed to perform wiring. Wiring by unauthorized or uncertified personnel may result in bodily injury and/or malfunction of the robot system.
- Wall mounting and ceiling mounting:
  When mounting the Manipulator on a wall or ceiling, secure the Manipulator to the wall or ceiling that has enough strength and rigidity. Mounting the Manipulator on a wall or ceiling that has insufficient strength and rigidity is extremely hazardous and may result in serious bodily injury and/or severe equipment damage to the robot system as the Manipulator may fall or vibrate.
- Wall mounting and ceiling mounting:
  When mounting the Manipulator on a wall or ceiling, for safety purposes, attach the support to the Manipulator base to prevent the Manipulator from falling. If the Manipulator falls, it is extremely hazardous and may result in serious bodily injury and/or severe equipment damage to the robot system.
- When cleaning the Manipulator, do not rub it strongly with alcohol or benzene.
  It may lose luster on the coated face.
- Be careful not to let machining dust, wire cut wastes or contamination get inside the robot controller. They can cause malfunctions and fire.
- Do not subject the connector to shocks or loads when connecting cables.
- Do not pull the cables forcibly when disconnecting cables.
- Make sure that the serial numbers on each equipment match. Improper connection may not only cause improper function of the robot system but also safety problems.
- Before connecting the connector, make sure that the pins are not bent. Connecting with the pins bent may damage the connector and result in malfunction of the robot system.

CAUTION	■ When with the brake release unit or the external short connector: If the Manipulator is operated without connecting the brake release unit or the external short connector, the brakes cannot be released, and it may cause damage on them. After using the brake release unit, be sure to connect the external short connector to the Manipulator, or check connection of the connector for the brake release unit. ■ Install the controller at a height of 0.4 to 2m above the floor to maintain easily. ■ Install a power-off switch at a height of 0.6 to 1.9m.

Precautions for Operation

The following items are safety precautions for qualified Operator personnel:

WARNING	■ Do not enter the operating area of the Manipulator while the power to the robot system is turned ON. Entering the operating area with the power ON is extremely hazardous and may cause serious safety problems as the Manipulator may move even if it seems to be stopped. ■ When the Manipulator stops for unknown reasons during automatic operation, never approach the Manipulator. If you need to approach the Manipulator, press the Emergency Stop switch or turn OFF the main power before approaching. When turning OFF the main power, be careful not to create a new hazard. ■ When you abort a program and restart the robot system during automatic operation, be sure not to create a new hazard in peripherals, then start the program. ■ Before operating the robot system, make sure that no one is inside the safeguarded area. When the Manipulator moves unexpectedly, it may result in serious safety problems. ■ For teaching and start-up work, set the robot system in teach mode. After placing the Emergency Stop switch in a position to press any time, work. The Manipulator may move unexpectedly due to wrong operation, it may result in serious safety problems. ■ Immediately press the Emergency Stop switch whenever the Manipulator moves abnormally while the robot system is operated. Continuing operation of the robot system while the Manipulator moves abnormally is extremely hazardous and may result in serious bodily injury and/or severe equipment change to the robot system.

WARNING

- The interlock of the Safety Door must be functioning when the robot system is operated. Do not operate the system under the condition that the switch cannot be turned ON/OFF. (I.E. the condition where the switch is disabled) (Example: Tape is put around the switch to hold it closed.) Operating the robot system when the switch is not functioning properly is extremely hazardous and may cause serious safety problems as the Safety Door input cannot fulfill its intended function.
- If a person is caught or trapped in the manipulator due to a malfunction or abnormality, use the brake release function to move the manipulator and escape.

  SCARA robot:
  For joints without electromagnetic brakes, just move them by hand. For joints with brakes (Joint #3 only, or Joints #3 and #4), with the main power of the controller turned on, press the brake release switch on the Manipulator to move the Manipulator by hand.

  6-Axis robot:
  With brake release unit:
  Use the brake release unit to release the electromagnetic brake of the Manipulator and operate the Manipulator by your hand. Be careful of the arm falling and rotation due to its own weight.

  Without brake release unit:
  Release the electromagnetic brake of the Manipulator from the EPSON RC+ command window and move the Manipulator by your hand. Be careful of the arm falling and rotation due to its own weight.
- If mounting Manipulator on the mobile platform (Cartesian coordinate robot, wheeled platform, AGV, etc.) and pressing Emergency Stop switch to stop Manipulator, be sure to design the system that the mobile platform also stops. If the mobile platform does not stop and it keeps moving, it is extremely hazardous and may result in serious bodily injury and/or severe equipment damage to the robot system, and may cause serious safety problems.
- Do not operate Manipulator when the mobile platform (Cartesian coordinate robot, wheeled platform, AGV, etc.) is moving. When using Manipulator, it must be surrounded by the safeguards. Operating Manipulator while the mobile platform is moving may result in serious bodily injury and/or severe equipment damage to the robot system.
- Do not touch Manipulators or controllers when operating. They can get hot in operation and can cause burns.
- When working inside the safeguard, use the teaching operation mode (low speed, low power).

WARNING

- To shut off power to the robot system, disconnect the power plug from the power source.
- Do not open the cover(s) of the Controller or the Manipulator except while maintaining it. Opening the cover(s) of the Controller is extremely hazardous and may result in electric shock even when its main power is OFF because of the inside high voltage charge unit.
- Do not touch or operate the robot controller with wet hands. Touching or operating with wet hands may cause an electric shock or malfunction.

CAUTION

- When operating the Manipulator, make sure that:
  - No one is inside the safety guard of the Manipulator
  - The Manipulator and related equipment are not in an abnormal state
- Whenever possible, only one person should operate the robot system. If it is necessary to operate the robot system with more than one person, ensure that all people involved communicate with each other as to what they are doing and take all necessary safety precautions.
- SCARA robot

  Joint #1, #2, and #4:
  If the joints are operated repeatedly with the operating angle less than 5 degrees, the Manipulator may get damaged early due to the bearings are not being covered with grease during movement. To prevent early breakdown, move each joint larger than 50 degrees for about once an hour.

  Joint #3:
  If the up-and-down motion of the hand is less than 10 mm, move the joint a half of the maximum stroke for about once an hour.
- 6-Axis robot

  Each Joint:
  If the joints are operated repeatedly with the operating angle less than 5 degrees, the Manipulator may get damaged early due to the bearings are not being covered with grease during movement. To prevent early breakdown, move each joint larger than 30 degrees for about once an hour.
- Vibration (resonance) may occur continuously depending on the combination of robot motion speed, Arm orientation, and end effector load of the Manipulator. Vibration arises from natural vibration frequency of the Arm and can be controlled by following measures.
  - Changing the Manipulator speed
  - Changing the teach points
  - Changing the end effector load

CAUTION

- When mounting Manipulator on the mobile platform, be sure to stop Manipulator while the mobile platform is in operation. Manipulator stops when motors on all axes are turned OFF (servo free status). If you cannot turn OFF the motor, set power mode to “Low” and perform exclusive control of mobile platform and Manipulator so that they do not move simultaneously.
- Manipulator may be warmed up due to motor heat or similar causes. Do not touch the Manipulator until temperature falls. Also, make sure the temperature of the Manipulator falls and is not hot when you touch it. Then perform teaching or maintenance.
- SCARA robot:
  While pressing the brake release switch, be careful of the arm falling and rotation of the hand due to its own weight. It may cause pinching of fingers, damage to the manipulator, or malfunction.
- 6-Axis robot:
  Normally, release the brake of joints one by one. Take extra care if you need to release the brakes of two or more joints simultaneously. Releasing the brakes of two or more joints simultaneously may result in hands or fingers being caught and/or equipment damage to or malfunction of the Manipulator as the arms of the Manipulator may move in unexpected directions.
- 6-Axis robot:
  After releasing the brake, the arm may fall by its own weight or move to the unexpected direction. Make sure to prepare a countermeasure to prevent the arm from falling and check the operation environment is safe.
- 6-Axis robot:
  Before releasing the brake, be sure to keep the Emergency Stop switch handy so that you can immediately press the Emergency Stop switch. Otherwise, you cannot immediately stop the arm falling due to an erroneous operation. The arm falling may cause equipment damage to and/or malfunction of the Manipulator.
- When with the brake release unit or the external short connector:
  If the Manipulator is operated without connecting the brake release unit or the external short connector, the brakes cannot be released, and it may cause damage on them.

  After using the brake release unit, be sure to connect the external short connector to the Manipulator, or check connection of the connector for the brake release unit.

Precautions for Maintenance

Read this chapter carefully to understand safe maintenance procedures before performing any maintenance.

Only personnel who has taken maintenance training held by us and suppliers should be allowed to perform the maintenance of robot system.

WARNING	■ Do not remove any parts unless otherwise instructed by maintenance manual. Follow the maintenance procedure strictly as described. Improper removal of parts or improper maintenance may cause not only malfunction of the robot system but serious safety problems. ■ If you have not received training, keep away from the Manipulator while the power is ON. Do not enter the operating area while the power is ON. Entering the operating area with the power ON is extremely hazardous and may cause serious safety problems as the Manipulator may move even it seems to be stopped. In addition, establish a safe working procedure to prevent danger due to unexpected movement of the Manipulator or wrong operation by the operator, and work according to the procedure. ■ When you check the operation of the Manipulator after replacing parts, be sure to check it while you are outside of the safeguarded area. Checking the operation of the Manipulator while you are inside of the safeguarded area may cause serious safety problems as the Manipulator may move unexpectedly. ■ Before operating the robot system, make sure that both the Emergency Stop switches and safeguard switch function properly. Operating the robot system when the switches do not function properly is extremely hazardous and may result in serious bodily injury and/or serious damage to the robot system as the switches cannot fulfill their intended functions in an emergency. ■ When touching the terminal on the outside of the controller or connector for maintenance, turn OFF the Controller and shut off power supply to prevent electric shock. ■ Be sure to shut off the power supply before cleaning or tightening the terminal screws. Failure to shut off all phases may result in electric shock, product damage, or malfunction.

WARNING

- To shut off power to the robot system, disconnect the power plug from the power source.
- Before performing any replacement procedure, display a sign (ex. “Work in progress”), turn OFF the robot system and related equipment, and then disconnect the power plug from the power source. Performing any replacement procedure with the power ON is extremely hazardous and may result in electric shock and/or malfunction of the robot system.
- Do not connect or disconnect the motor connector while the power is ON. The manipulator may malfunction which is extremely hazardous. Also, when you work while the power is ON, it may result in electric shock or malfunction.
- Be sure to connect the cables with securely protected the high voltage unit to the Controller properly. Do not allow unnecessary strain on the cables. (Do not put heavy objects on the cables. Do not bend or pull the cables forcibly.) It may result in damage to the cables, disconnection, and/or contact failure. These are extremely hazardous and may result in electric shock and/or improper function of the robot system.

CAUTION

- Carefully use alcohol, liquid gasket, and adhesive following respective instructions and instructions below. Careless use of alcohol, liquid gasket, or adhesive may cause a fire and/or safety problem.

  Never put alcohol, liquid gasket, or adhesive close to fire.

  Use alcohol, liquid gasket, or adhesive while ventilating the room.

  Wear protective gear including a mask, protective goggles, and oil-resistant gloves.

  If alcohol, liquid gasket, or adhesive gets on your skin, wash the area thoroughly with soap and water.

  If alcohol, liquid gasket, or adhesive gets into your eyes or mouth, flush your eyes or wash out your mouth with clean water thoroughly, and then see a doctor immediately.

CAUTION	■ Wear protective gear including a mask, protective goggles, and oil-resistant gloves during grease up. If grease gets into your eyes, mouth, or on your skin, follow the instructions below. If grease gets into your eyes: Flush them thoroughly with clean water, and then see a doctor immediately. If grease gets into your mouth: If swallowed, do not induce vomiting. See a doctor immediately. If grease just gets into your mouth, wash out your mouth with water thoroughly. If grease gets on your skin: Wash the area thoroughly with soap and water. ■ Manipulator may be warmed up due to motor heat or similar causes. Do not touch the Manipulator until temperature falls. Also, make sure the temperature of the Manipulator falls and you do not feel hot when you touch it. Then perform teaching or maintenance. ■ Secure about 50 cm of spaces around the Manipulator when performing maintenance of Manipulator.

Warning labels

Warning labels and Labels are attached around the locations of the Controller and Manipulator where specific dangers exist.

Be sure to comply with descriptions and warnings on the labels to operate and maintain the Robot System safely.

Do not tear, damage, or remove the labels. Use meticulous care when handling those parts or units to which the following labels are attached as well as the nearby areas.

Controller

Location		Warning label	Note
A	1		Hazardous voltage exists while the Manipulator is ON. Do not open the cover for 300 seconds after the Power is OFF. There is a risk of electric shock due to the residual voltage. Disconnect and lockout main power before performing maintenance and repair.
	2		Residual voltage exists. To avoid electric shock, do not open the cover while the Power is ON, or for 5 minutes after the Power is OFF.

<table>
<tr><th colspan="2">Location</th><th>Warning label</th><th>Note</th></tr>
<tr><td colspan="2">B</td><td>
</td><td>Disconnect and lockout main power before performing maintenance and repair.</td></tr>
<tr><td rowspan="2">C</td><td>1</td><td>
</td><td rowspan="2">Do not connect the followings to the TP port of the controller. Connecting to the followings may result in malfunction of the device because pin assignments are different.

OPTIONAL DEVICE dummy plug
Operation Pendant OP500
Operator Pendant OP500RC
Jog Pad JP500
Teaching Pendant TP-3**
Operator Panel OP1</td></tr>
<tr><td>2</td><td>
</td></tr>
<tr><td colspan="2">D</td><td> </td><td>Hazardous voltage exists while the Manipulator is ON.</td></tr>
</table>

Location	Warning label	Note
1	Replace only with battery type: CR17335SE(Sanyo or FDK)	A label with the battery type.
2	-	The product name, model name, serial number, information which laws and regulations are supported, product specifications, manufacturer, importer, date of manufacture, country of manufacture, etc. are listed. For details, see the label affixed to the product.
3	CONTROLLER S/N R7C x x x x x x x	Serial number of Controller are printed.

Labeling position: RC90-B Control Unit

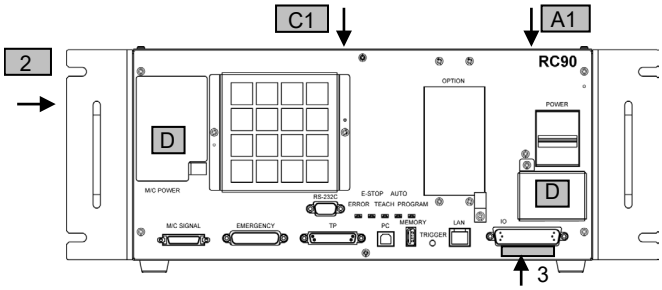

Labeling position: RC700 Control Unit

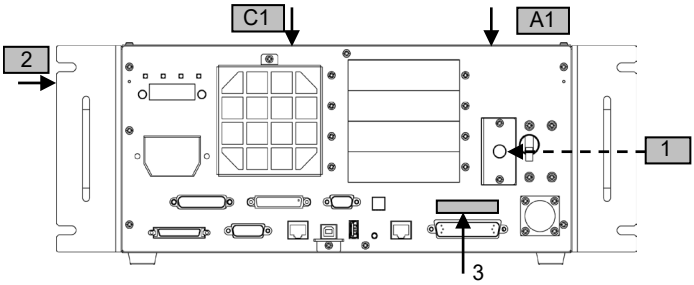

Labeling position: RC700-A Control Unit

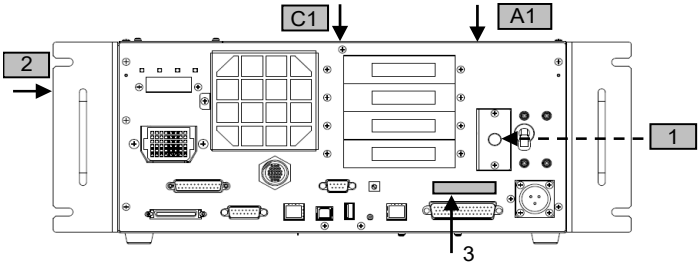

Labeling position: RC700-D Control Unit

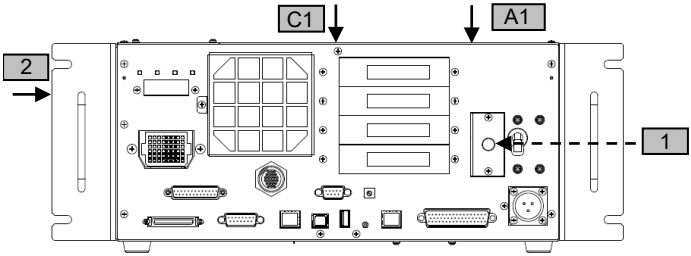

Labeling position: RC700-A-UL/RC700-D-UL Control Unit

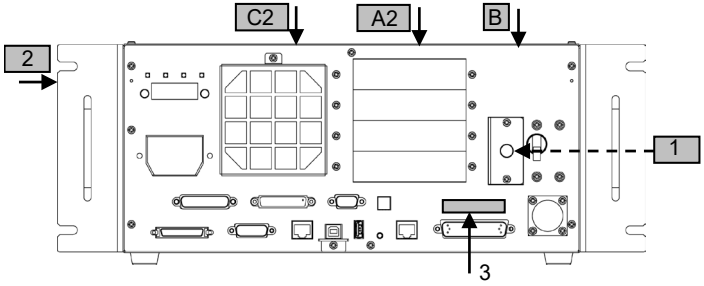

Labeling position: RC700DU / RC700DU-A Drive Unit

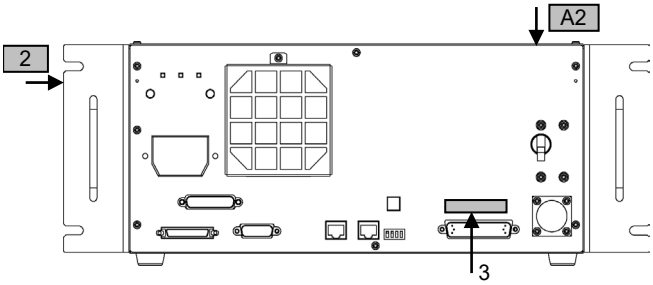

Labeling position: RC700DU-A-UL Drive Unit

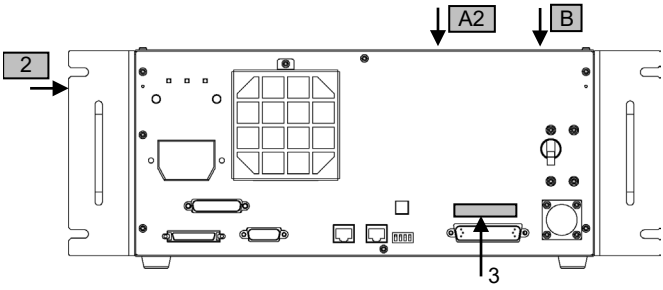

Manipulator

Location	Warning label	Note
A	 	Before loosening the base mounting screws, hold the arm and secure it tightly with a band to prevent hands or fingers from being caught in the Manipulator. For installation and transportation of robots, follow the directions of each robot manuals.
	 	To avoid the Manipulator from falling, support the Manipulator before removing the base mounting screws. For installation and transportation of robots, follow the directions of each robot manuals.

Location	Warning label	Note
B		Do not enter the operation area while the Manipulator is moving. The robot arm may collide against the operator. This is extremely hazardous and may result in serious safety problems.
C		Hazardous voltage exists while the Manipulator is ON.

Location	Warning label	Note
D		You can catch your hand or fingers between the shaft and cover when bringing your hand close to moving parts. Manipulators with bellows do not have this label since there is no danger of being your hand or fingers caught.
		You can catch your hand or fingers when bringing your hand close to moving parts.

Location	Warning label	Note
E		When releasing the brakes, be careful of the arm falling and rotation due to its own weight. This label is attached on the Manipulator and optional brake release unit as well.
		When releasing the brakes, be careful of the arm falling / rotation due to its own weight.

Location	Warning label	Note
F		Only authorized personnel should perform sling work and operate a crane. When these operations are performed by unauthorized personnel, it is extremely hazardous and may result in serious bodily injury and/or severe equipment damage to the robot system.

Location	Warning label	Note
F	 	Only authorized personnel should perform sling work and operate a crane and a forklift. When these operations are performed by unauthorized personnel, it is extremely hazardous and may result in serious bodily injury and/or severe equipment damage to the robot system.

Location	Warning label	Note
G		HOT Be careful not to burn yourself.
H	 	Do not connect the followings to the TP port of the controller that attached this label. Connecting to the followings may result in malfunction of the device because pin assignments are different. OPTIONAL DEVICE dummy plug Operation Pendant OP500 Operator Pendant OP500RC Jog Pad JP500 Teaching Pendant TP-3** Operator Panel OP1

Location	Label	Note
1	-	The product name, model name, serial number, information which laws and regulations are supported, product specifications, manufacturer, importer, date of manufacture, country of manufacture, etc. are listed. For details, see the label affixed to the product.

Location of Labels: G1

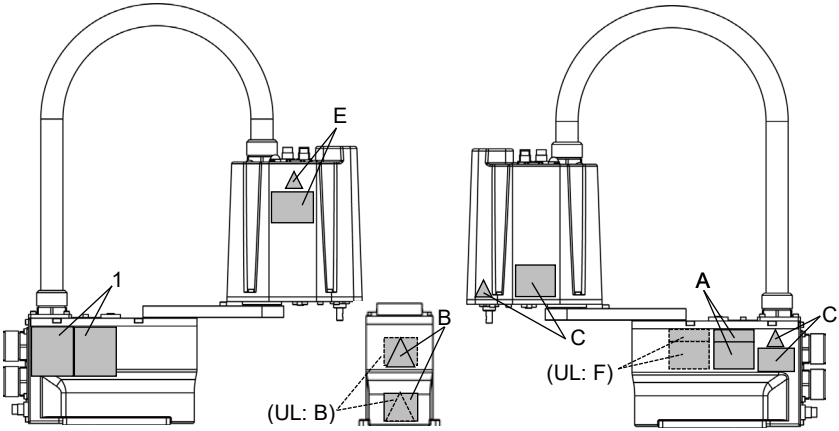

Location of Labels: G3

Common

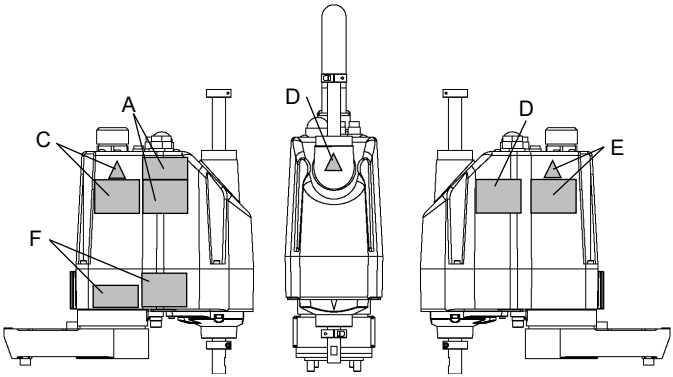

Table Top Mounting

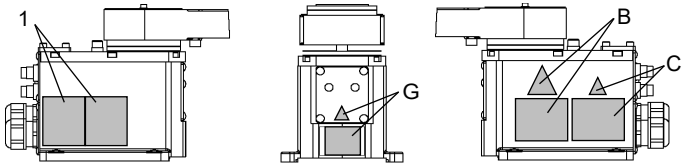

Multiple Mounting

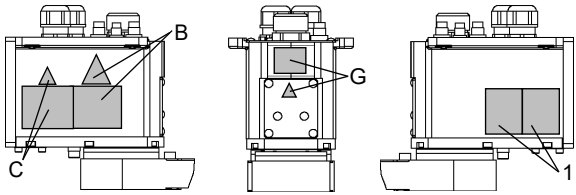

Location of Labels: G6

Common

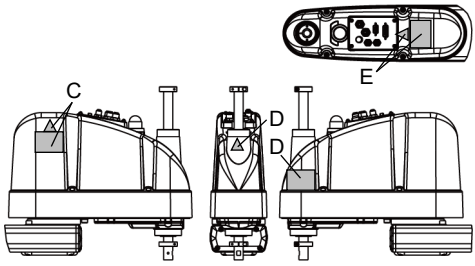

Table Top Mounting:

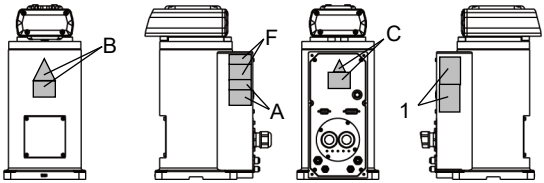

Ceiling Mounting

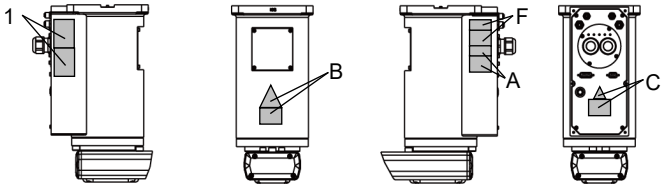

Wall Mounting

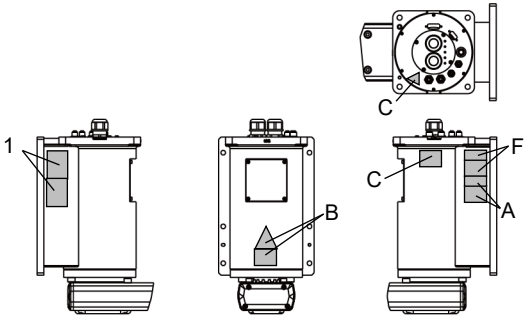

Location of Labels: G10/G20

Common

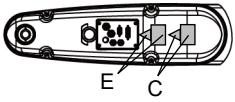

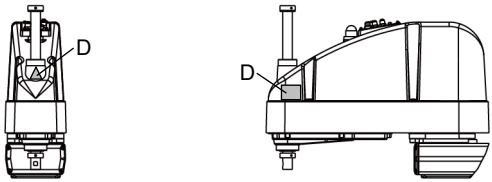

Table Top Mounting:

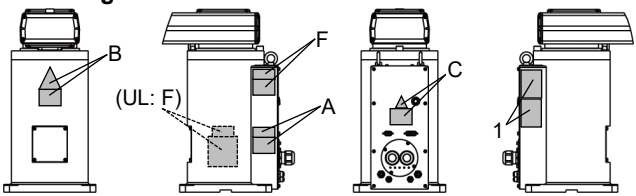

Ceiling Mounting

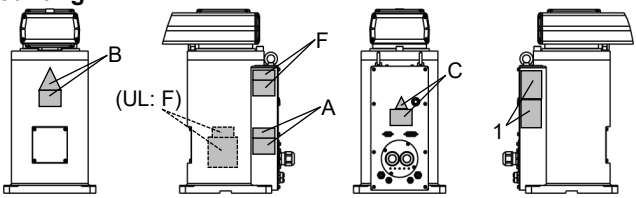

Wall Mounting

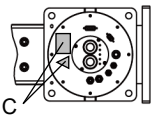

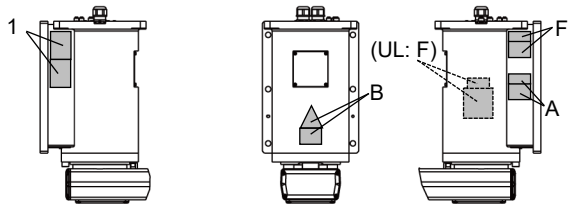

Location of Labels: LS3-B

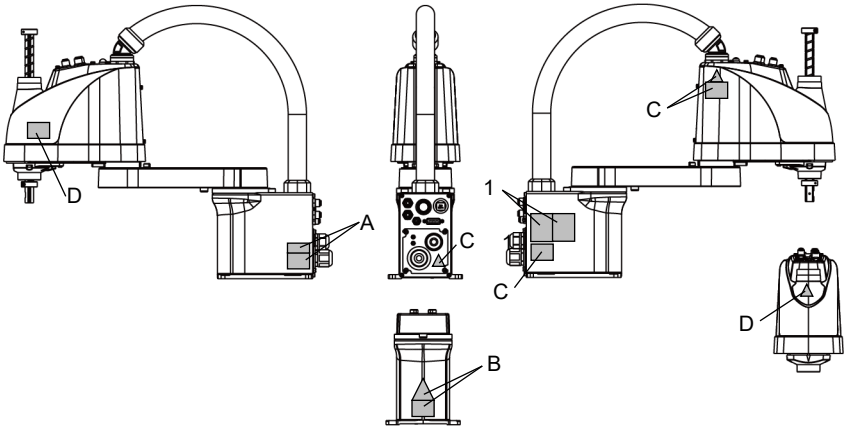

Location of Labels: LS6-B

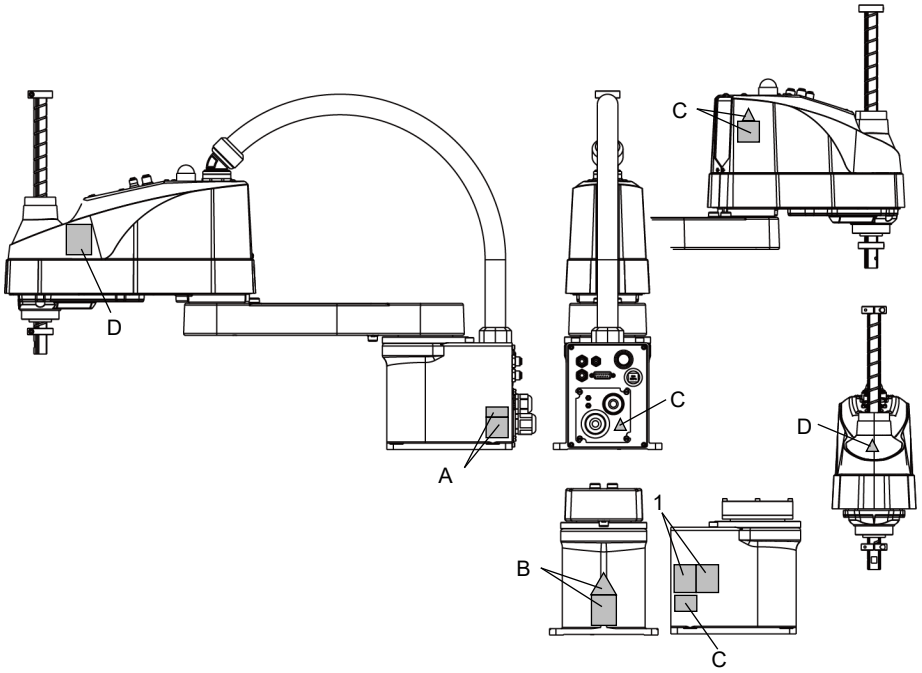

Location of Labels: LS10-B

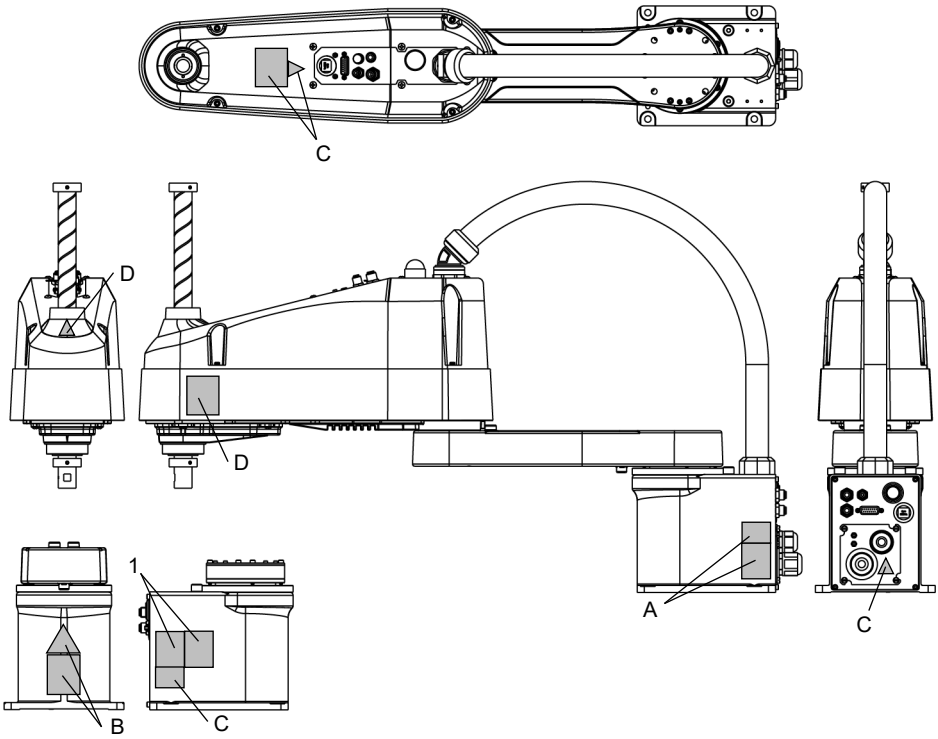

Location of Labels: LS20-B

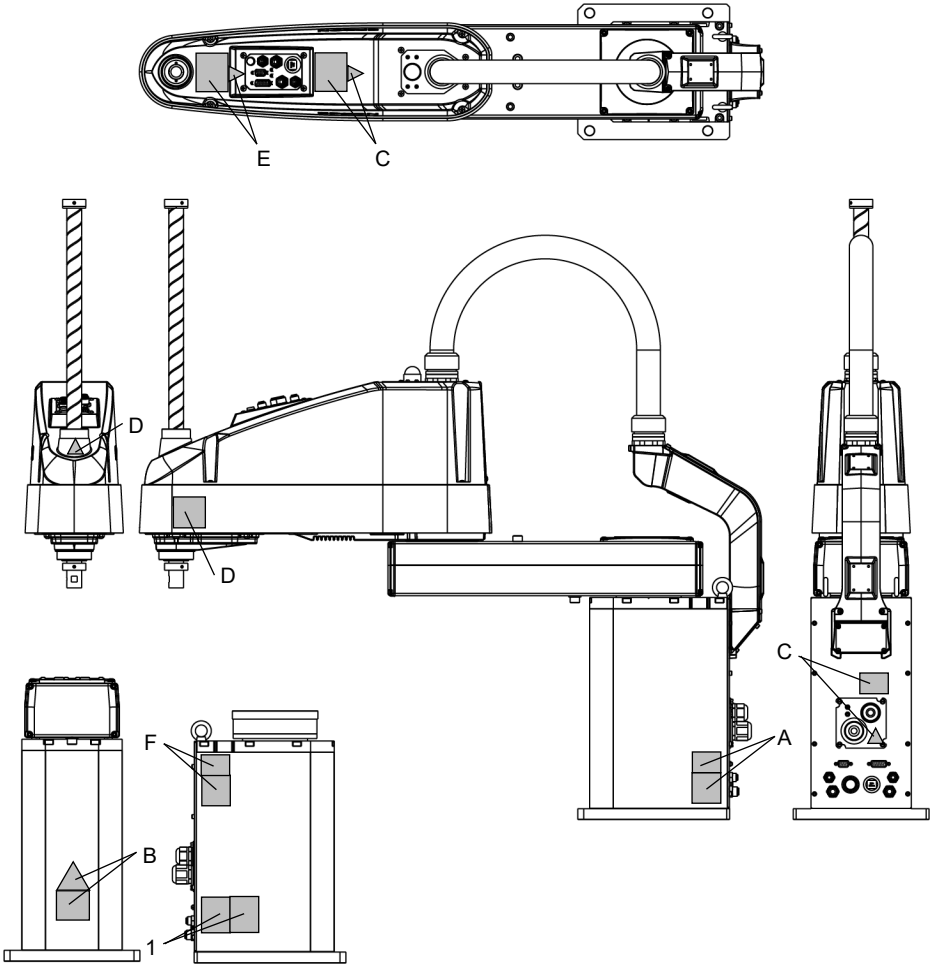

Location of Labels: T3

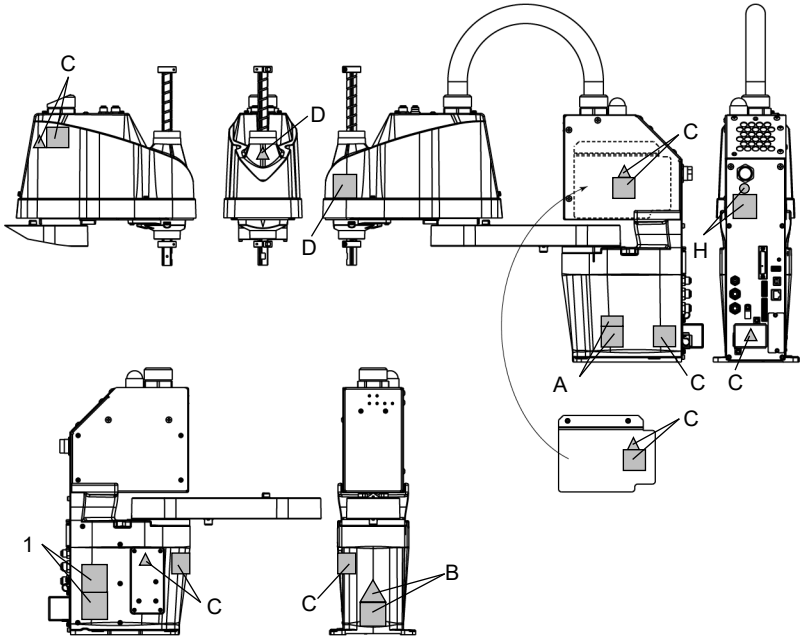

Location of Labels: T6

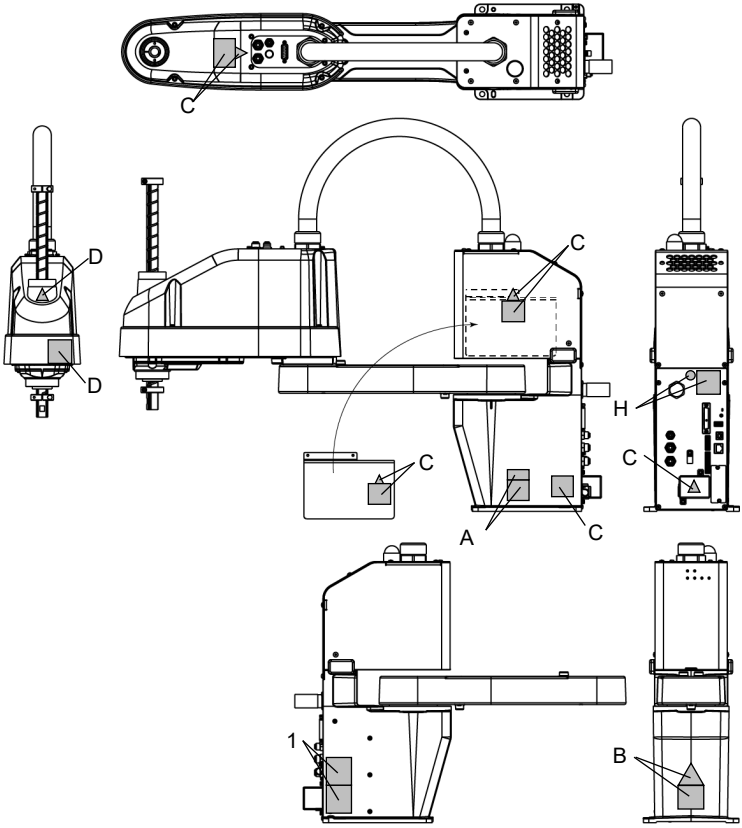

Location of Labels: T3-B

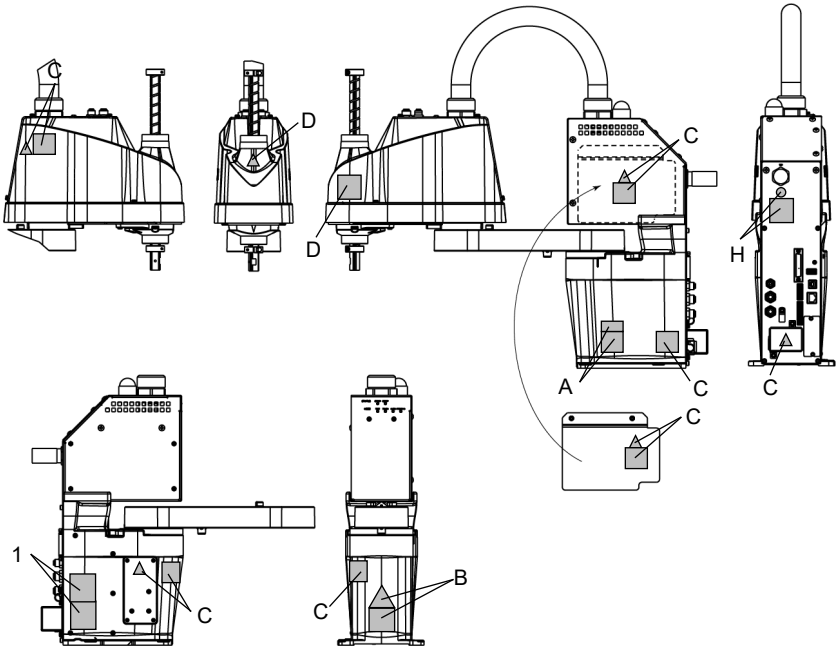

Location of Labels: T6-B

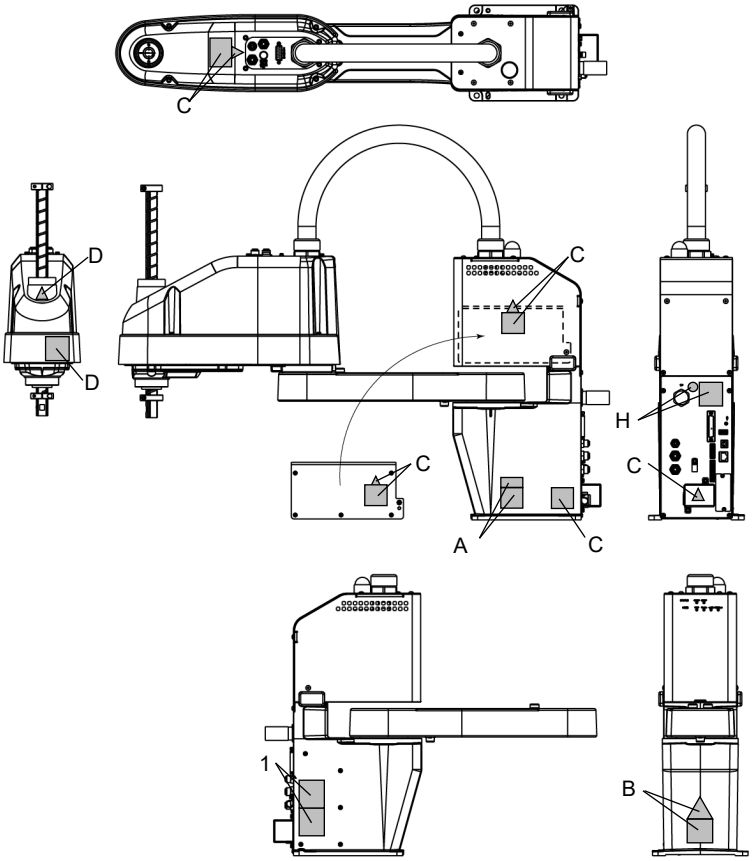

Location of Labels: RS3

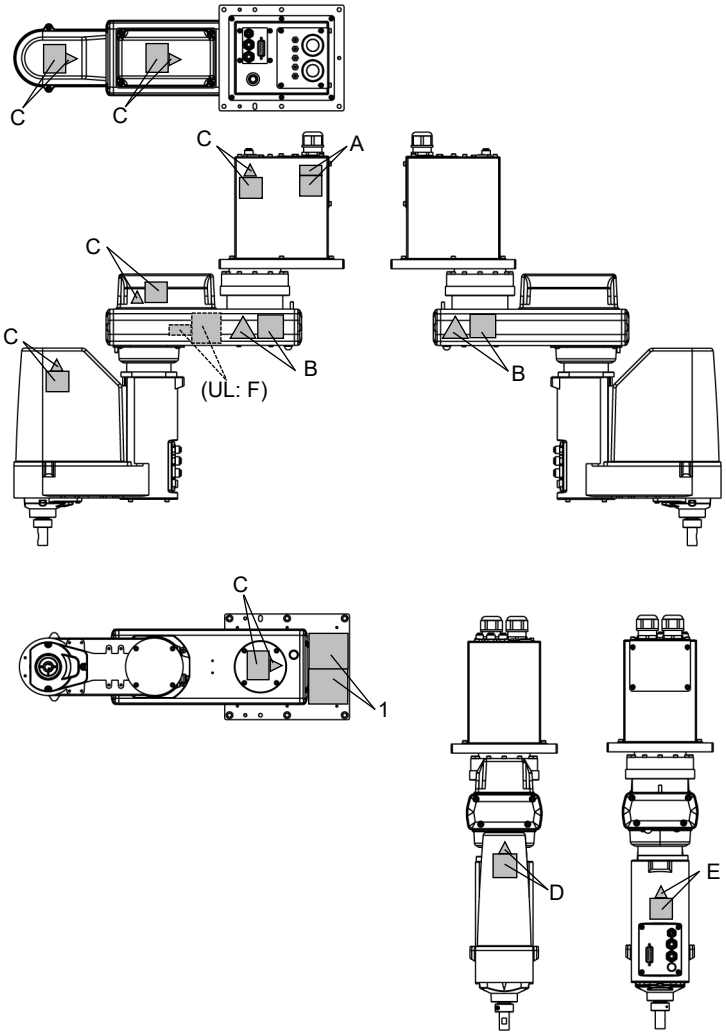

Location of Labels: RS4

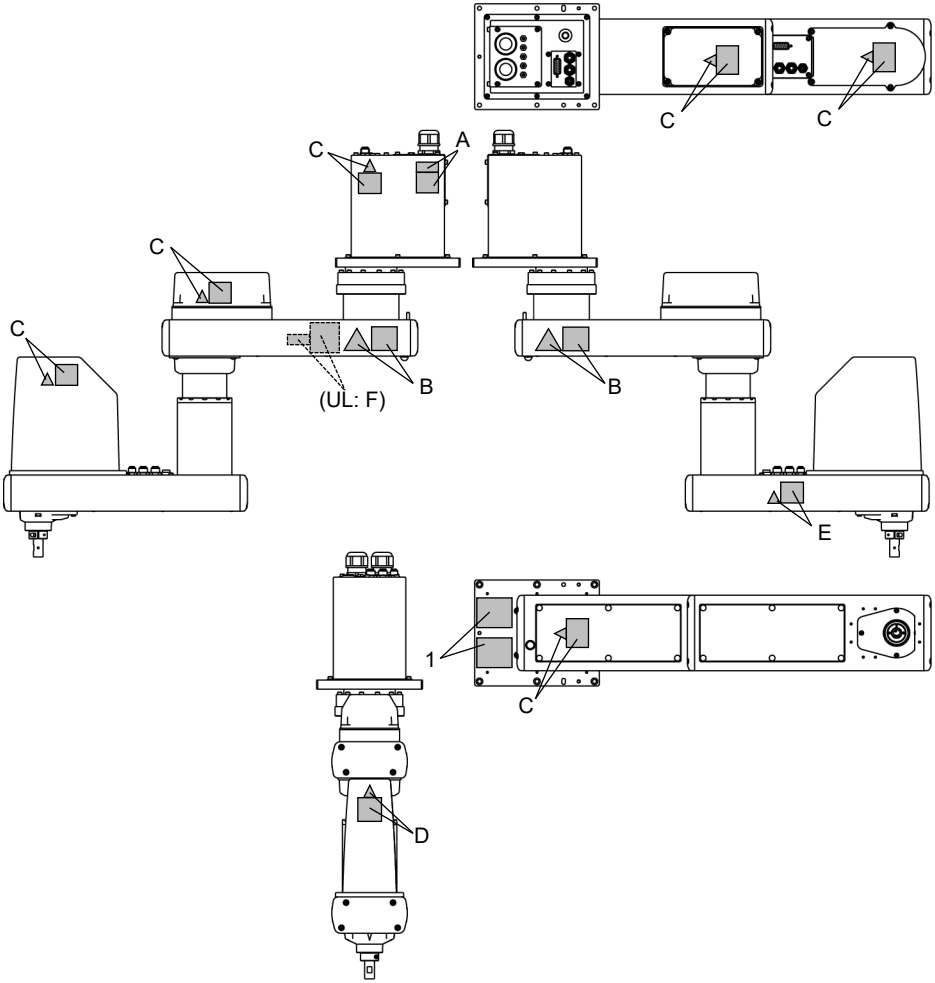

(Figure: RS3-351*)

Location of Labels: C4

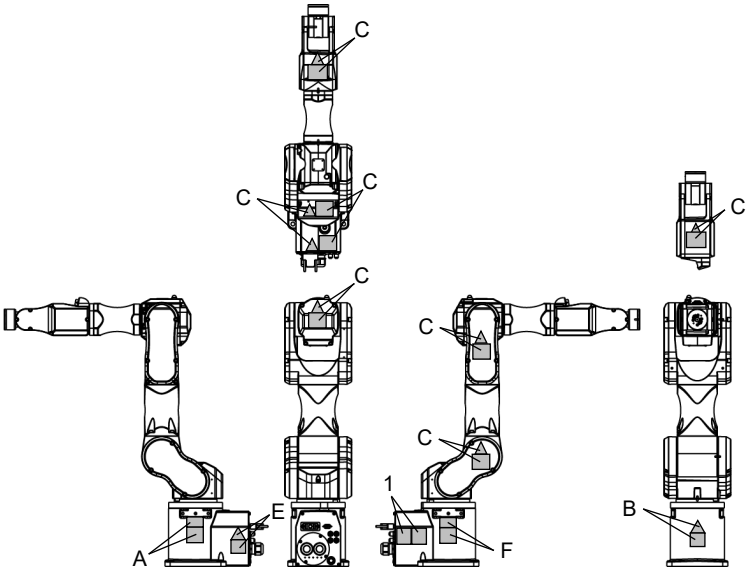

E: This label is attached on the UL-approved Manipulators and the optional brake release unit as well.

Location of Labels: C8

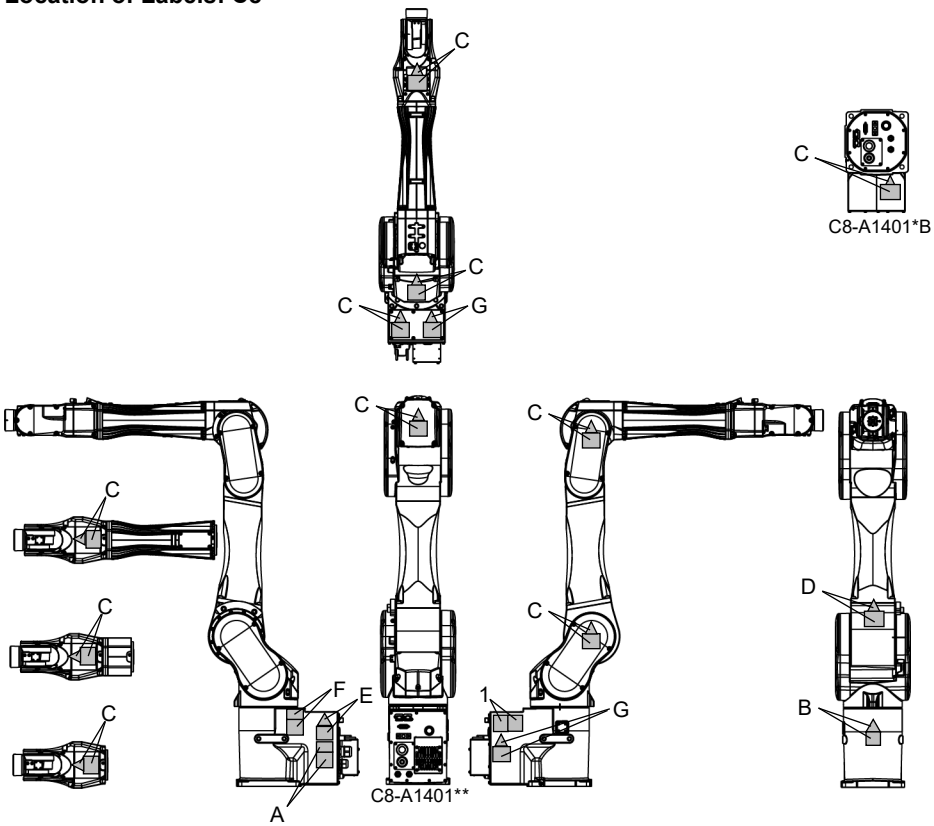

E: This label is attached on the UL-approved Manipulators and the optional brake release unit as well.

Location of Labels: C12

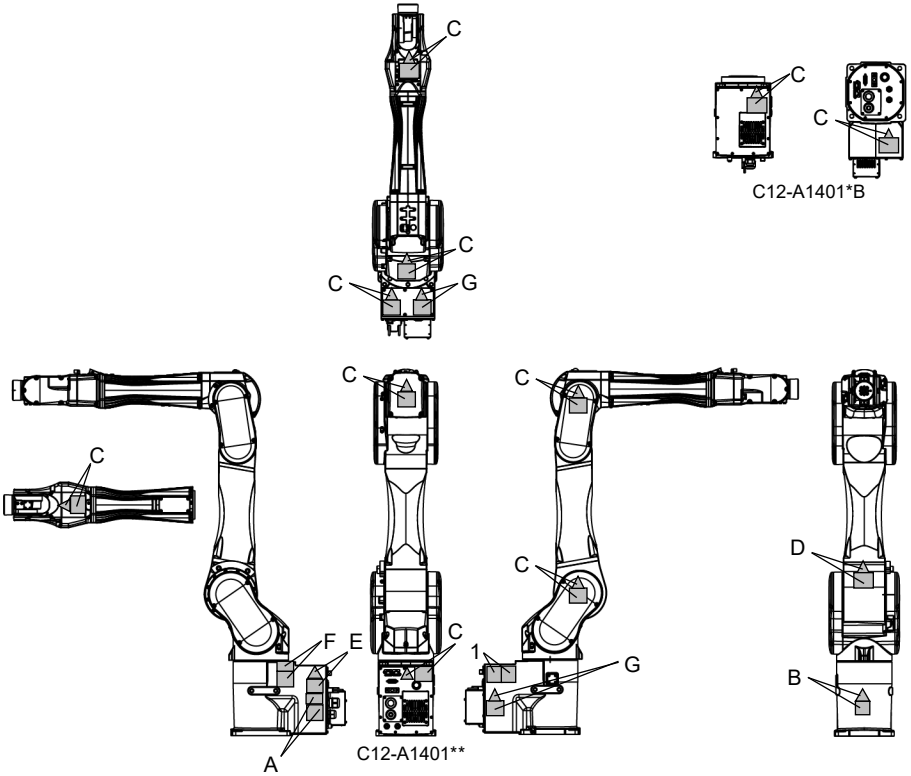

E: This label is attached on the UL-approved Manipulators and the optional brake release unit as well.

Location of Labels: N2

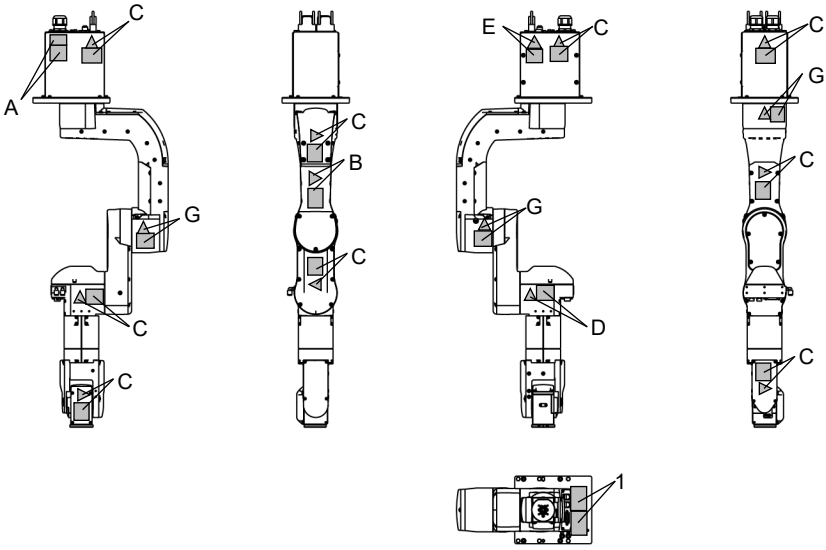

E: This label is attached on the UL-approved Manipulators and the optional brake release unit as well.

Location of Labels: N6-A850*

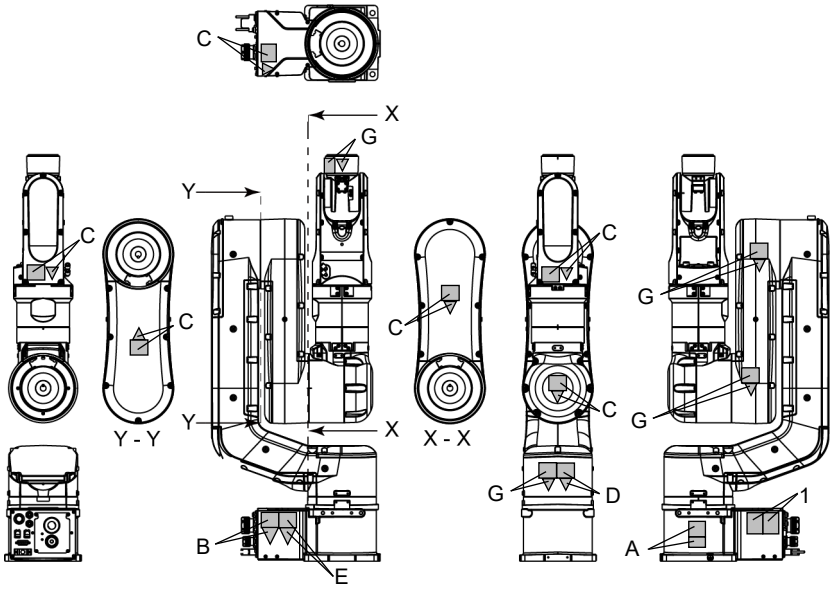

E: This label is attached on the UL-approved Manipulators and the optional brake release unit as well.

Location of Labels:N6-A1000**

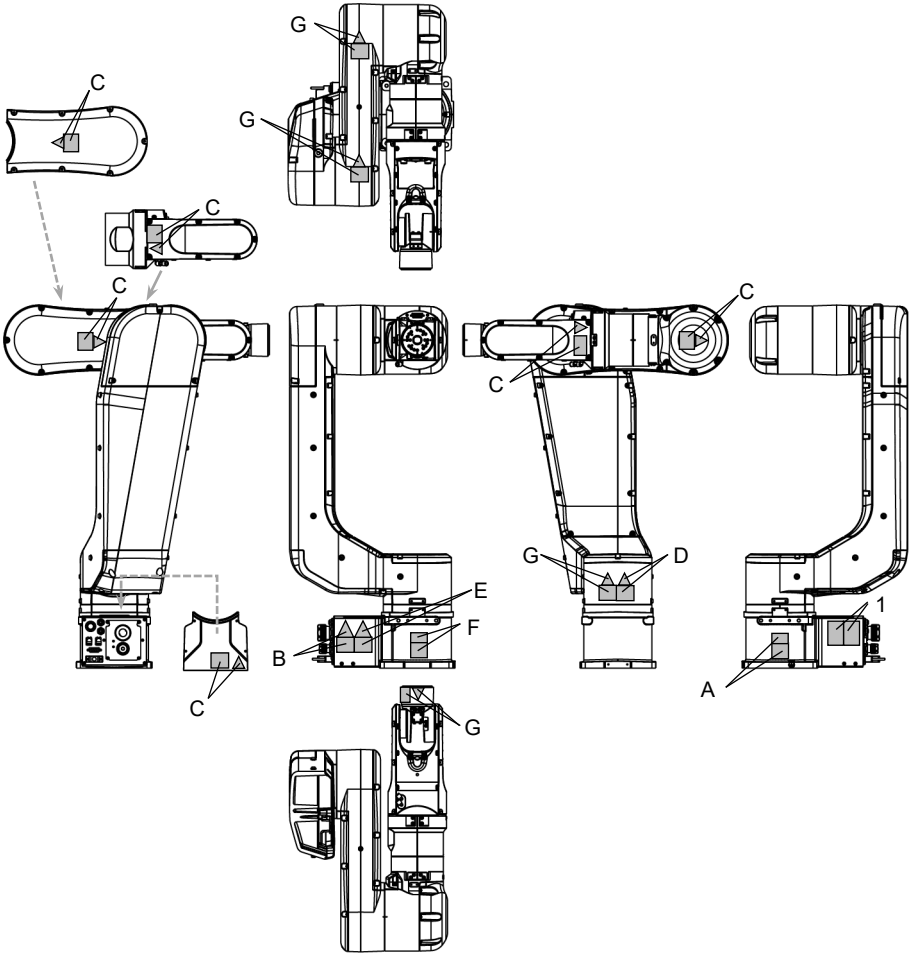

E: This label is attached on the UL-approved Manipulators and the optional brake release unit as well.

Location of Labels: VT

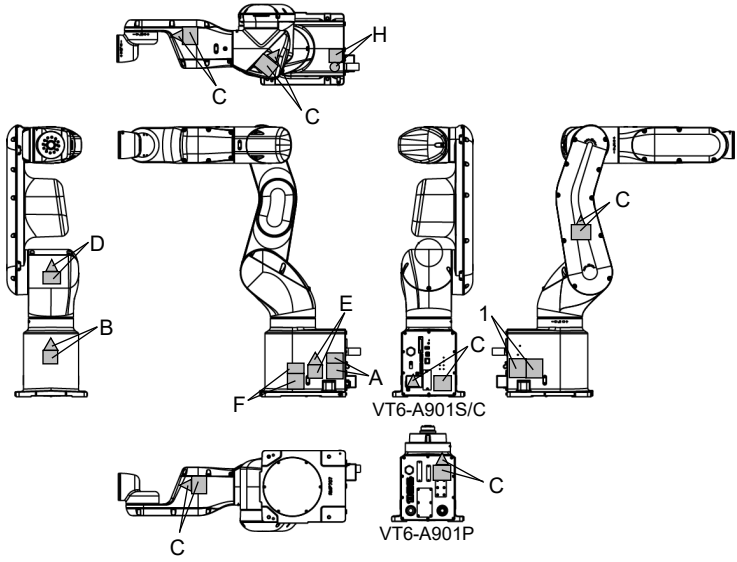

For GX series

Position		Warning label	NOTE
A			Hazardous voltage exists while the Manipulator is ON.
B	1		The surface of the Manipulator is hot during and after operation, and there is a risk of burns.
	2		

Position	Warning label	NOTE
1	-	The product name, model name, serial number, information which laws and regulations are supported, product specifications, manufacturer, importer, date of manufacture, country of manufacture, etc. are listed. Refer to the attached label for more details.
2	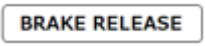	Indicates position of break release button.
3		Indicates position of screw hole for eyebolt mounting

Location of Labels GX4

Common (Arm 2)

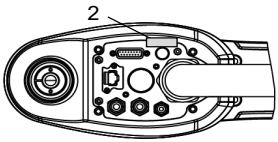

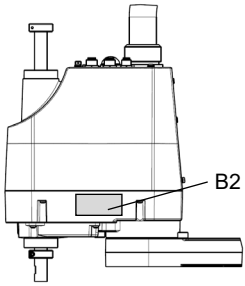

Table Top Mounting

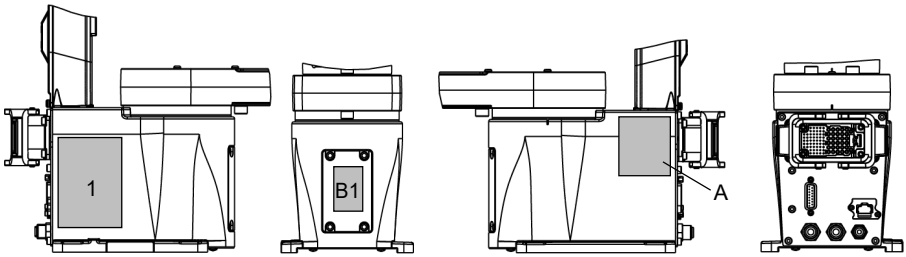

Table Top Mounting (Cable Downward Model)

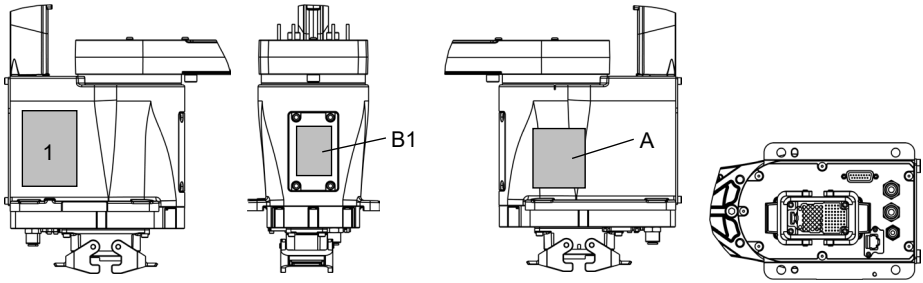

Multiple Mounting

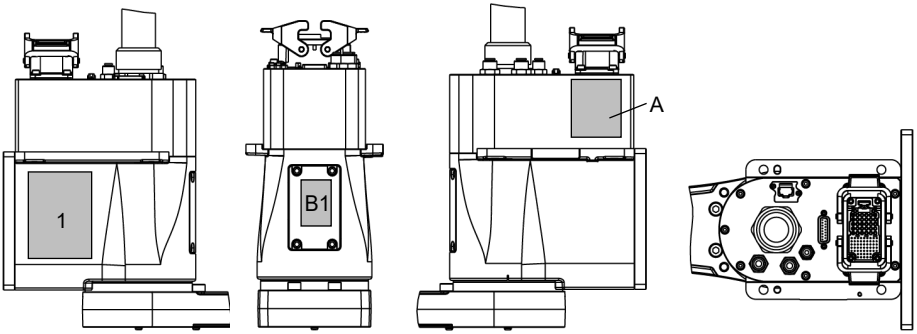

Location of Labels GX8

Common (Arm 2)

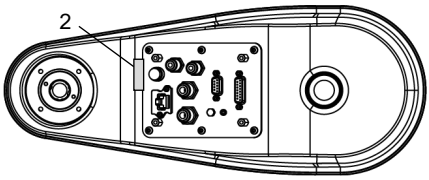

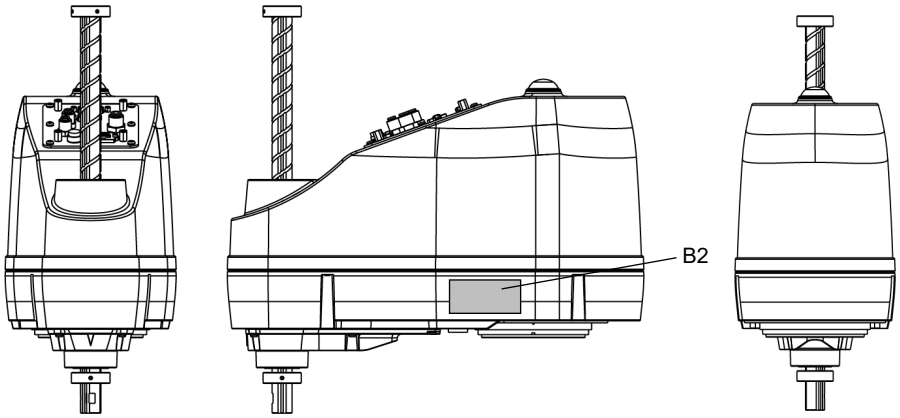

Table Top Mounting

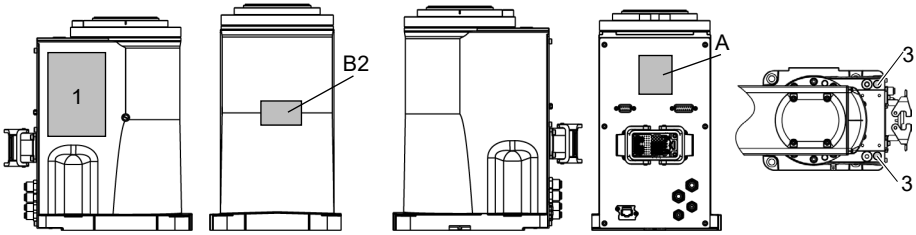

Table Top Mounting (Cable Downward Model)

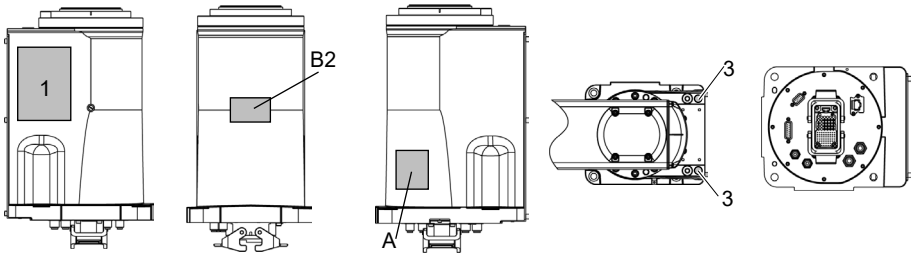

Wall Mounting

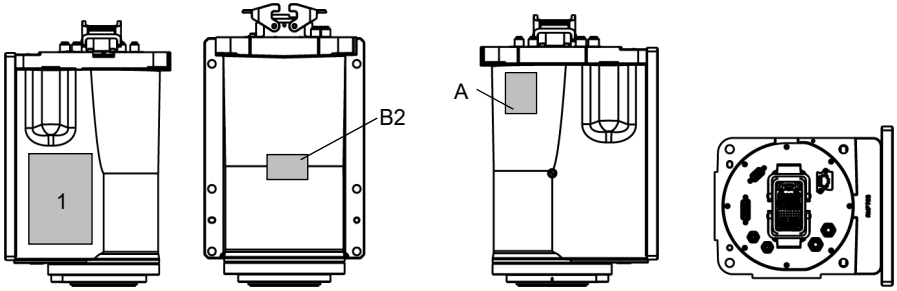

Ceiling Mounting

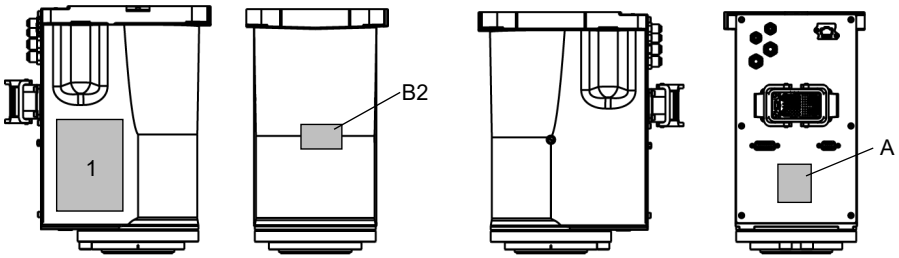

Safety Features

The following safety features which robot system has are particularly important. Make sure that these and other features function properly before operating the robot system.

Emergency Stop Switch

The EMERGENCY connector on the Controller has expansion Emergency Stop input terminals used for connecting the Emergency Stop switches.

Pressing any Emergency Stop switch can shut off the motor power immediately and the robot system will enter the Emergency Stop condition.

Use Emergency Stop Switch that has safety features more than PLd.

Safety features of Emergency Stop Input : Reference Standards ISO13849-1:2015
Category3, PLd

Stop category of Emergency Stop Input : Reference Standards IEC60204-1:2016
Category0:RC90-B, RC700, RC700-A, T, T-B, VT
Category 1: RC700-D

Safety Door Input

In order to activate this feature, make sure that the Safety Door Input switch is connected to the EMERGENCY connector at the Controller.

When the safety door is opened, normally the Manipulator immediately stops the current operation, and the status of Manipulator power is operation-prohibited until the safety door is closed and the latched condition is released. In order to execute the Manipulator operation while the safety door is open, you must change the mode selector key switch on the Teach Pendant to the “Teach” mode. Turning on the Manipulator is available only when the enable switch is on. In this case, the Manipulator is operated in low power status.

Use Emergency Stop Switch that has safety features more than PLd.

Safety features of Safety Door Input : Reference Standards ISO13849-1:2015
Category3, PLd

Stop category of Safety Door Input : Reference Standards IEC60204-1: 2016
Category1

Even when using a light curtain as a safety door, keep the operation-prohibited status until the latched condition is released, as with the safety door.

Protection Features

The robot control system supports protection features described below. However, these features are prepared for unexpected occurrence.

Low Power Mode

The motor power is reduced in this mode.

Executing a power status change instruction will change to the restricted (low power) status regardless of conditions of the safety door or operation mode. The restricted (low power) status ensures the safety of the operator and reduces the possibility of peripheral equipment destruction or damage caused by careless operation.

Dynamic Brake

The dynamic brake circuit includes relays that short the motor armatures. The dynamic brake circuit is activated when there is an Emergency Stop input or when any of the following errors is detected: encoder cable disconnection, motor overload, irregular motor torque, motor speed error, servo error (positioning or speed overflow), irregular CPU, memory check-sum error and overheat condition inside the Motor Driver Module.

Motor Overload Detection

The dynamic brake circuit is activated when the system detects that the load on the motor has exceeded its capacity.

Irregular Motor Torque (out-of-control Manipulator) Detection

The dynamic brake circuit is activated when irregularity with motor torque (motor output) is detected (in which case the Manipulator is out of control).

Motor Speed Error Detection

The dynamic brake circuit is activated when the system detects that the motor is running at incorrect speed.

Positioning Overflow - Servo Error - Detection

The dynamic brake circuit is activated when the system detects that the difference between the Manipulator's actual position and commanded position exceeds the margin of error allowed.

Speed Overflow - Servo Error - Detection

The dynamic brake circuit is activated when the Manipulator's actual speed is detected to mark an overflow (the actual speed is outside the nominal range) error.

CPU Irregularity Detection

Irregularity of CPU that controls the motor is detected by the watchdog timer. The system CPU and the motor controlling CPU inside the Controller are also designed to constantly check each other for any discrepancies. If a discrepancy is detected, the dynamic brake circuit is activated.

Memory Check-sum Error Detection

The dynamic brake circuit is activated when a memory check-sum error is detected.

Overheat Detection at the Motor Driver Module

The dynamic brake circuit is activated when the temperature of the power device inside the Motor Driver module is above the nominal limit.

Relay Deposition Detection

The dynamic brake circuit is activated when relay deposition is detected.

Over-Voltage Detection

The dynamic brake circuit is activated when the voltage of the Controller (or Manipulator when you use T/VT series) is above the normal limit.

Power Supply Voltage Drop Detection

The dynamic brake circuit is activated when the drop of the power supply voltage is detected.

Temperature Anomaly Detection

The temperature of the Controller (or Manipulator when you use T/VT series) anomaly is detected.

Fan Malfunction Detection

Malfunction of the fan rotation speed is detected.

Training

Training Held by Persons in Charge of Safety Management

Persons in charge of safety management should confirm that the operators who program, operate, and maintain the Manipulator and robot system take proper training. Also confirm that the operators have expertise to conduct the work safely.

Training should include at least the following:

- Study of regulation safety procedures, and safety-related recommendations by robot manufacturers and system designers.
- Clear explanation of the work involved.
- Description of all control equipment required for the work and their functions.
- Explanation of potential hazards involved in the work.
- Work safety procedures and specific methods of avoiding potential hazards.
- Safety device and interlock function testing and confirmation methods are working properly.

Knowledge and Training You Need for Operating the Robot System

Contents	Knowledge and training you need
About robot system	Take “Safety program for the industrial robot operator” * that follows the laws and regulations of each nation. * “Safety program for the industrial robot operator” must include: - Knowledge of industrial robots. - Knowledge of operations and teaching industrial robots - Knowledge of inspections. - Knowledge of related rules/regulations.
Transportation procedure (Sling work and operate a crane or forklift)	To be qualified to perform sling work and operate a crane or forklift
Installing Power plug (e.g. when installing power plug to the power socket of the factory.)	To have expertise and skills for installing Power plug for factory
Installing Power cable	To have expertise and skills for installing Power cable
Mounting option board or wall mounting option to controller	To take maintenance training held by us and suppliers
Installing Fieldbus I/O module for T/VT series	
Maintenance the robot system	

The Manuals of This Product

Manual Types

The following are typical manual types for this product and an outline of the descriptions.

Safety Manual (book, PDF)

This manual contains safety information for all people who handle this product. The manual also describes the process from unpacking to operation and the manual you should look at next.

Read this manual first.

- Safety precautions regarding robot system and residual risk
- Declaration of conformity
- Training
- Flow from unpacking to operation

RC700 series Manual (PDF): RC700, RC700-A
RC700-D Manual (PDF)
RC90 series Manual (PDF)

This manual explains the installation of the entire robot system and the specifications and functions of the controller. The manual is primarily intended for people who design robot systems.

- The installation procedure of the robot system (specific details from unpacking to operation)
- Daily inspection of the controller
- Controller specifications and basic functions

xx series Manual (PDF) (xx: Manipulator series name)

This manual describes the specifications and functions of the Manipulator. The manual is primarily intended for people who design robot systems.

- Technical information, functions, specifications, etc. required for the Manipulator installation and design
- Daily inspection of the Manipulator

Status Code/Error Code List (PDF)

This manual contains a list of code numbers displayed on the controller and messages displayed in the software message area. The manual is primarily intended for people who design robot systems or do programming.

RC700 series Maintenance Manual (PDF): RC700, RC700-A
RC90 series Maintenance Manual (PDF)
xx series Maintenance Manual (PDF) (xx: Manipulator series name)

This manual describes the details of maintenance etc. The manual is intended for people who perform maintenance.

- Daily inspection
- Replacement and repair of maintenance parts
- The method of firmware update and controller setting backup etc.

Manuals about Maintenance for RC700-D series does not come with the products. Only authorized personnel who have taken maintenance training held by the manufacturer or dealer should be allowed to perform the robot maintenance. Please contact the supplier of your region for more information.

EPSON RC+ 7.0 User's Guide (PDF)

This manual describes general information about program development software.

EPSON RC+ 7.0 SPEL+ Language Reference (PDF)

This manual describes the robot programming language "SPEL+".

Other Manual (PDF)

Manuals for each option are available.

How to Read the Manuals

The PDF manuals can be browsed on EPSON RC+ software.

To browse the PDF manuals on your PC,
select EPSON RC+ 7.0-[Help]-[PDF Manual].
(Click <Start>-[Program]-[EPSON RC+ 7.0] from the Windows desktop.)

You can also browse from the following website.
URL: https://download.epson.biz/robots/

Installing the Software and Manuals

(1) Insert the EPSON RC+ 7.0 Setup DVD which provided with products in the DVD drive. Follow the instructions on the screen to enter information and select the drive to install.

(2) When the dialog for selecting options is displayed, make sure [Manuals] is checked, and then proceed to the next step.

NOTE

■ The installation may take several minutes.

NOTE

■ Manuals are provided in PDF. To refer to the manual, use the pre-installed PDF viewer in Windows, or install a PDF viewer such as Adobe Acrobat Reader.

(3) When the completion screen is displayed, the installation is complete.

NOTE

■ If you check the message asking you to restart, restart your PC.

Outline from Unpacking to Operation of Robot System

This section describes outline from unpacking to operation of robot system.

1.Unpacking

2.Transportation

3.Installation

4.Power-on

5.Settings of EPSON RC+ 7.0
(First Step - For the first)

6.Connection and settings of peripherals and options
(Second Step – For the next)

Refer to the following PDF manuals for the details of 1 to 6 from your robot system.

RC700 series Manual (RC700, RC700-A)

RC700-D Manual

RC90 series Manual

T series Manual

T-B series Manual

VT series Manual

For how to read the manual, refer to the following.

This manual "*The Manuals of This Product*"

When an error occurs, pay attention to the followings.

NOTE

The error number displayed on the Controller or teach pendant can be a tip to find the cause of the abnormality. When an error occurs, be sure to write down the error number and reset the error by referring to "*Status Code / Error Code List*".

NOTE

When an abnormality is caused by our robot system and exceeds the range that the customer can handle, please contact our service department (supplier).

China RoHS

This sheet and Environment Friendly Use Period label on the product are based on the laws and regulations in Chinese mainland. These are not applicable outside of Chinese mainland.

产品中有害物质的名称及含量

机器人型号名称	C4 C8 C12 G1 G3 G6 G10 G20 LS-B GX4 GX8 T T-B VT RS3 RS4 N2 N6 系列					
部件名称	有害物质					
	铅 (Pb)	汞 (Hg)	镉 (Cd)	六价铬 (Cr(VI))	多溴联苯 (PBB)	多溴二苯醚 (PBDE)
机械手臂	×	○	○	○	○	○
电机(执行器单元、电机单元)	×	○	○	○	○	○
减速机单元	×	○	○	○	○	○
电磁制动器	×	○	○	○	○	○
同步皮带	○	○	○	○	○	○
电池单元(电池、电池固定架、电池板)	×	○	○	○	○	○
密封(密封垫圈、油封、润滑脂封、垫片、O型环)	×	○	○	○	○	○
润滑脂	○	○	○	○	○	○
电缆(M/C电缆、连接电缆)	×	○	○	○	○	○
散热片	○	○	○	○	○	○
LED指示灯	○	○	○	○	○	○
电路板	×	○	○	○	○	○
外罩	○	○	○	○	○	○
滚珠丝杠花键	○	○	○	○	○	○
制动解除开关	×	○	○	○	○	○
伸缩罩	×	○	○	○	○	○
FPC单元	×	○	○	○	○	○
扎带	○	○	○	○	○	○
原点标记	○	○	○	○	○	○
气管接头	×	○	○	○	○	○

本表格依据SJ/T 11364的规定编制。

○:表示该有害物质在该部件所有均质材料中的含量在GB/T 26572规定的限量要求以下。

×:表示该有害物质至少在该部件的某一均质材料中的含量超出GB/T 26572规定的限量要求。

本产品中含有的有害物质的部件皆因全球技术发展水平限制而无法实现有害物质的替代。

产品环保使用期限的使用条件

关于适用于在中华人民共和国境内销售的本产品的环保使用期限，在遵守该产品的安全及使用注意事项的条件下，从生产日期开始计算，在标志的年限内，本产品中含有的有害物质不会对环境造成严重污染或对人身、财产造成严重损害。

附注： 本表格及环保使用期限标志依据中国大陆地区的有关规定而制定，中国大陆地区以外的国家/地区则无需关注。

Note: This sheet and Environment Friendly Use Period label on the product are based on the laws and regulations in Chinese mainland. These are not applicable outside of Chinese mainland

产品中有害物质的名称及含量

机器人型号名称		C4 C8 C12 G1 G3 G6 G10 G20 LS-B GX4 GX8 T T-B VT RS3 RS4 N2 N6系列					
部件名称		有害物质					
		铅 (Pb)	汞 (Hg)	镉 (Cd)	六价铬 (Cr(VI))	多溴联苯 (PBB)	多溴二苯醚 (PBDE)
选件	MC短接连接器	×	○	○	○	○	○
	制动解除单元	×	○	○	○	○	○
	校准板	×	○	○	○	○	○
	相机安装板	×	○	○	○	○	○
	托架	×	○	○	○	○	○
	壁挂式选件	×	○	○	○	○	○
	外部接线单元	×	○	○	○	○	○
	内部接线单元	×	○	○	○	○	○
	工具适配器（支架）	×	○	○	○	○	○
	耦合器	×	○	○	○	○	○
	兼容板	×	○	○	○	○	○
	机械挡块	×	○	○	○	○	○
	管接头	×	○	○	○	○	○
	法兰	×	○	○	○	○	○
	接线导轨	×	○	○	○	○	○
	波纹管	×	○	○	○	○	○
	底座适配器	×	○	○	○	○	○
	底座侧固定支架	×	○	○	○	○	○
	用户接头套件	×	○	○	○	○	○
	用户连接器套件	×	○	○	○	○	○
	S250 series (力传感器)	×	○	○	○	○	○

本表格依据SJ/T 11364的规定编制。

○:表示该有害物质在该部件所有均质材料中的含量在GB/T 26572规定的限量要求以下。

×:表示该有害物质至少在该部件的某一均质材料中的含量超出GB/T 26572规定的限量要求。

本产品中含有的有害物质的部件皆因全球技术发展水平限制而无法实现有害物质的替代。

产品环保使用期限的使用条件

关于适用于在中华人民共和国境内销售的本产品的环保使用期限，在遵守该产品的安全及使用注意事项的条件下，从生产日期开始计算，在标志的年限内，本产品中含有的有害物质不会对环境造成严重污染或对人身、财产造成严重损害。

附注： 本表格及环保使用期限标志依据中国大陆地区的有关规定而制定，中国大陆地区以外的国家/地区则无需关注。

Note: This sheet and Environment Friendly Use Period label on the product are based on the laws and regulations in Chinese mainland. These are not applicable outside of Chinese mainland.

产品中有害物质的名称及含量

控制器型号名称	RC700 RC700-A RC700DU RC700DU-A RC700-D RC90-B T T-B VT系列					
部件名称	有害物质					
	铅 (Pb)	汞 (Hg)	镉 (Cd)	六价铬 (Cr(VI))	多溴联苯 (PBB)	多溴二苯醚 (PBDE)
控制器	×	○	○	○	○	○
机壳	○	○	○	○	○	○
电路板	×	○	○	○	○	○
开关电源	×	○	○	○	○	○
风扇	×	○	○	○	○	○
线束	×	○	○	○	○	○
电源保护装置	×	○	○	○	○	○
存储卡	×	○	○	○	○	○
电池	○	○	○	○	○	○
连接器附件	×	○	○	○	○	○

本表格依据SJ/T 11364的规定编制。

○:表示该有害物质在该部件所有均质材料中的含量在GB/T 26572规定的限量要求以下。

×:表示该有害物质至少在该部件的某一均质材料中的含量超出GB/T 26572规定的限量要求。

本产品中含有的有害物质的部件皆因全球技术发展水平限制而无法实现有害物质的替代。

产品环保使用期限的使用条件

关于适用于在中华人民共和国境内销售的本产品的环保使用期限，在遵守该产品的安全及使用注意事项的条件下，从生产日期开始计算，在标志的年限内，本产品中含有的有害物质不会对环境造成严重污染或对人身、财产造成严重损害。

附注： 本表格及环保使用期限标志依据中国大陆地区的有关规定而制定，中国大陆地区以外的国家/地区则无需关注。

Note: This sheet and Environment Friendly Use Period label on the product are based on the laws and regulations in Chinese mainland. These are not applicable outside of Chinese mainland

产品中有害物质的名称及含量

控制器型号名称		RC700 RC700-A RC700DU RC700DU-A RC700-D RC90-B T T-B VT系列					
部件名称		有害物质					
		铅 (Pb)	汞 (Hg)	镉 (Cd)	六价铬 (Cr(VI))	多溴联苯 (PBB)	多溴二苯醚 (PBDE)
选件	USB密钥	×	○	○	○	○	○
	电缆 (MC电缆、TP转换电缆、控制器转换电缆 等)	×	○	○	○	○	○
	Hot Plug Kit	×	○	○	○	○	○
	OP1	×	○	○	○	○	○
	TP1	×	○	○	○	○	○
	TP2	×	○	○	○	○	○
	TP3	×	○	○	○	○	○
	再生模块	×	○	○	○	○	○
	接线端子	×	○	○	○	○	○
	通信板卡	×	○	○	○	○	○
	接线单元	×	○	○	○	○	○
	扩展I / O套件 (电路板/电缆)	×	○	○	○	○	○
	紧急停止开关	×	○	○	○	○	○
	I/O连接器	×	○	○	○	○	○
	传送带跟踪套件 (控制器/电缆)	×	○	○	○	○	○
	选件模块 (面板/操作模块/电缆)	×	○	○	○	○	○
	脉冲发生套件 (控制器/连接器)	×	○	○	○	○	○
	GigE相机	×	○	○	○	○	○
	相机镜头 (HF Series)	×	○	○	○	○	○
	AC适配器	×	○	○	○	○	○
	分光相机	×	○	○	○	○	○
	USB相机	×	○	○	○	○	○
	相机延长管	×	○	○	○	○	○
	相机三脚架适配器	×	○	○	○	○	○
	CV1	×	○	○	○	○	○
	CV2	×	○	○	○	○	○
	GigE相机触发连接器	×	○	○	○	○	○
	VRT (减振装置)	×	○	○	○	○	○

本表格依据SJ/T 11364的规定编制。

○:表示该有害物质在该部件所有均质材料中的含量在GB/T 26572规定的限量要求以下。

×:表示该有害物质至少在该部件的某一均质材料中的含量超出GB/T 26572规定的限量要求。

本产品中含有的有害物质的部件皆因全球技术发展水平限制而无法实现有害物质的替代。

产品环保使用期限的使用条件

关于适用于在中华人民共和国境内销售的本产品的环保使用期限，在遵守该产品的安全及使用注意事项的条件下，从生产日期开始计算，在标志的年限内，本产品中含有的有害物质不会对环境造成严重污染或对人身、财产造成严重损害。

附注： 本表格及环保使用期限标志依据中国大陆地区的有关规定而制定，中国大陆地区以外的国家/地区则无需关注。

Note: This sheet and Environment Friendly Use Period label on the product are based on the laws and regulations in Chinese mainland. These are not applicable outside of Chinese mainland.